CHRYSLER - 42RE

JEEP GRAND CHEROKEE
JEEP GRAND WAGONEER

TECHTRAN™ MANUAL

TRANSTAR™
TRANSTAR INDUSTRIES, INC.
12Y04
TECH MANUAL 42RE-A500SE
B
7350 YOUNG DRIVE, CLEVELAND, OHIO 44146 U.S.A.

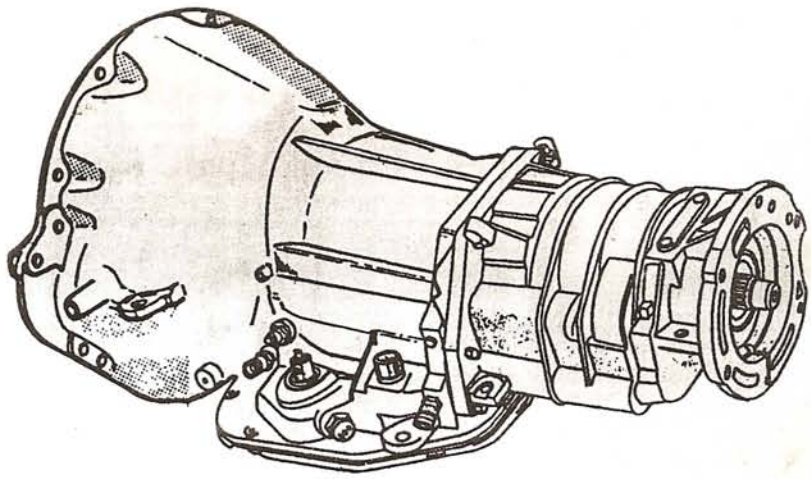

AUTOMATIC TRANSMISSION SERVICE GROUP

INDEX

APPLICATION CHART 4
DIAGNOSTIC FAULT CODES 6
HYDRAULIC AND GOVERNOR PRESSURE TESTS 7
ELECTRONIC GOVERNOR COMPONENTS 8
WIRING SCHEMATIC 12
DIAGNOSTIC CONNECTOR LOCATION 14
TRANSMISSION DIAGNOSIS CHARTS 15
TRANSMISSION DISASSEMBLY 30
TRANSMISSION SUBASSEMBLIES 38
CHECKBALL LOCATIONS 59
TRANSMISSION ASSEMBLY 67
BAND ADJUSTMENTS 73
OVERDRIVE SECTION DISASSEMBLY 75
OVERDRIVE SECTION ASSEMBLY 82
OVERDRIVE SECTION SELECTIVE MEASUREMENTS 92
SPECIFICATIONS 98
OIL FLOW CHARTS 99

AUTOMATIC TRANSMISSION SERVICE GROUP
9200 S. DADELAND BLVD. STE 720
MIAMI, FLORIDA 33156
(305) 670-4161

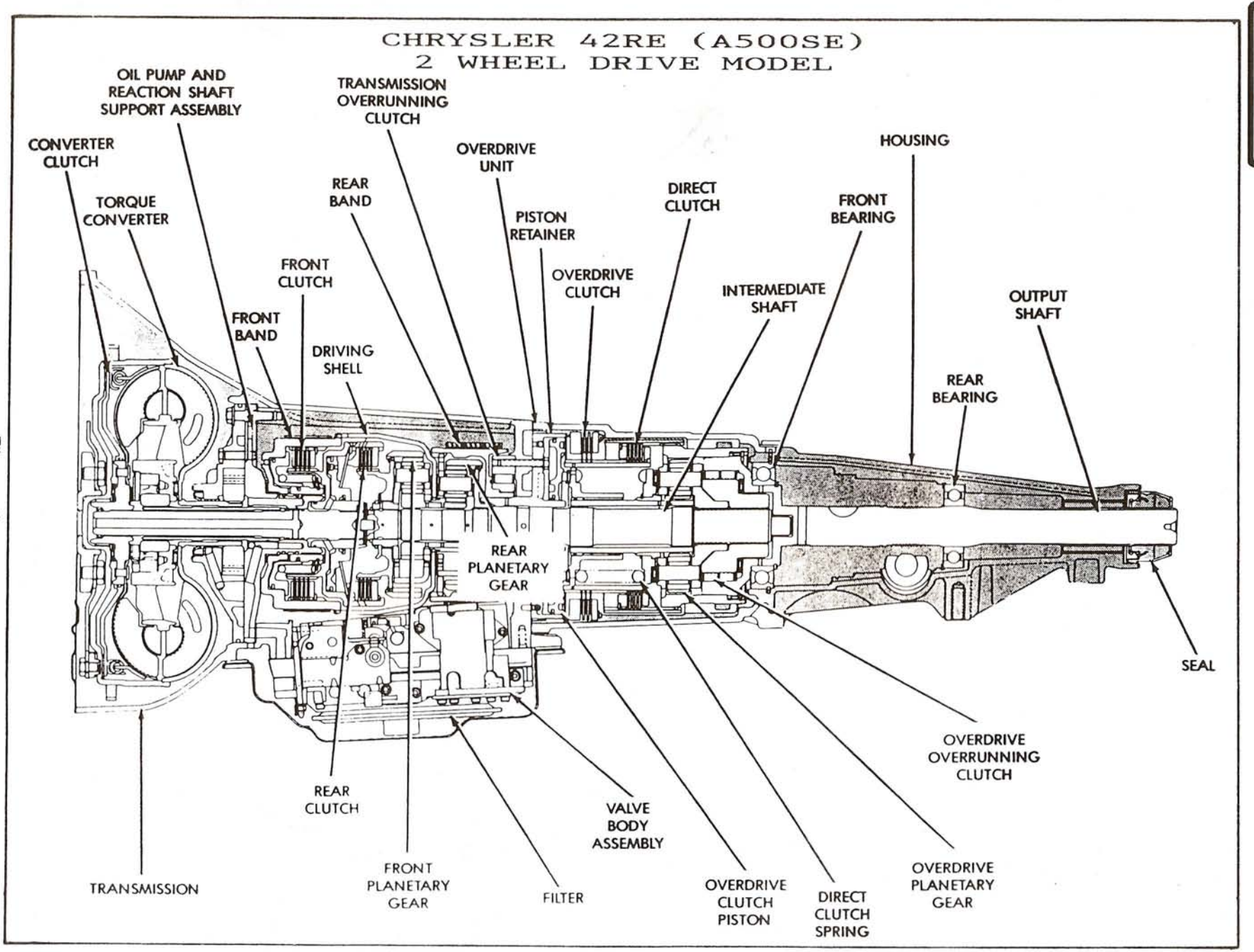
CHRYSLER 42RE (A500SE)
2 WHEEL DRIVE MODEL
OIL PUMP AND REACTION SHAFT SUPPORT ASSEMBLY
TRANSMISSION OVERRUNNING CLUTCH
CONVERTER CLUTCH
OVERDRIVE UNIT
HOUSING
REAR BAND
DIRECT CLUTCH
TORQUE CONVERTER
PISTON RETAINER
FRONT BEARING
FRONT CLUTCH
OVERDRIVE CLUTCH
INTERMEDIATE SHAFT
OUTPUT SHAFT
FRONT BAND
DRIVING SHELL
REAR BEARING
REAR PLANETARY GEAR
SEAL
OVERDRIVE OVERRUNNING CLUTCH
REAR CLUTCH
VALVE BODY ASSEMBLY
TRANSMISSION
FRONT PLANETARY GEAR
FILTER
OVERDRIVE CLUTCH PISTON
DIRECT CLUTCH SPRING
OVERDRIVE PLANETARY GEAR

Figure 1

TORQUE CONVERTER

A three element torque converter is used for all applications in the 42RE. Torque converter elements consist of the turbine, stator and impeller. The converter also contains an overrunning clutch and a converter clutch plate.

The converter clutch is electronically controlled. The converter clutch provides reduced engine RPM and greater fuel economy when it is engaged. Converter clutch engagement also provides much reduced transmission fluid temperatures.

The converter clutch will engage in 4th gear, and in 3rd gear when the overdrive control switch is in the OFF position.

The overrunning clutch is mounted in the stator hub, and prevents the stator from rotating in a direction opposite to the engine rotation. This retains the torque multiplication feature of the converter.

The torque converter should be replaced as an assembly when diagnosis indicates a malfunction has occured.

RECOMMENDED FLUID

The only fluid recommended for the 42RE transmission is Mopar ATF Plus type 7176. Do not use Dexron II except in emergency or if ATF Plus type 7176 is not available.

TRANSMISSION IDENTIFICATION

The transmission identification numbers and codes are stamped on the left side of the case just above the pan gasket area, (See Figure 3). The first number group is the assembly part number. The next number group, the transmission build date. The last number group is the serial number. Refer to this information when ordering replacement parts (See Figure 3).

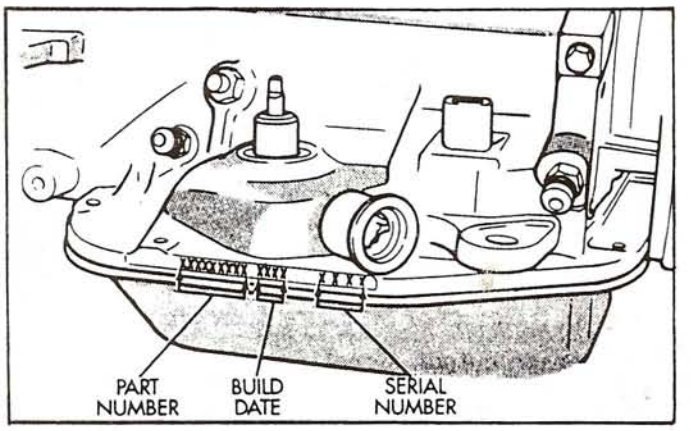

Figure 3

ELECTRONIC GOVERNOR COMPONENTS

Governor pressure is developed and controlled electronically in the 42RE. The components used for the development and control of governor pressure include:

- Governor Body
- Valve Body Transfer Plate
- Governor Pressure Solenoid
- Governor Pressure Sensor
- Fluid Temperature Thermister
- Transmission Speed Sensor
- Throttle Position Sensor
- Transmission Control Module (TCM)

GOVERNOR PRESSURE CURVES

There are four governor pressure curves programed into the TCM. The four different allow the TCM to adjust governor pressure for varying conditions.

Curve 1 is used for operation when fluid temperature is at, or below 30°F.

Curve 2 is used for operation when fluid temperature is at, or above 31°F, during normal city, or highway driving.

Curve 3 is used during wide open throttle operation.

Curve 4 is used when driving with transfer case in 4WD Low range.

TRANSMISSION SHIFTING

Shift valve operation in 42RE transmission with the electronic governor mechanism is basically unchanged. The 1-2 and 2-3 upshift sequence occurs exactly the same as in hydraulic governor transmissions. The valve body shift valves are still moved by a combination of throttle pressure and the governor pressure.

The only real difference is that governor pressure is generated by electrical components instead of a mechanical valve and weight assembly.

The conditions under which a shift to 4th will not occur, also remain the same. They are;

- Shift to 3rd not yet completed.
- Overdrive switch is in OFF position.
- Throttle at 3/4 to wide open position.
- MPH too low for 3-4 shift to occur.
- Fluid temperature is below 30°F, or above 250°F.

CONVERTER CLUTCH ENGAGEMENT

The Torque Converter Clutch (TCC) is engaged by the TCC Solenoid on the valve body. The TCC can be engaged in 3rd and 4th gear, depending on the overdrive control switch position.

If the overdrive control switch is in the normal (ON) position, the TCC will engage after the shift to 4th gear, and above approximately 45 MPH.

If the overdrive control switch is in the OFF position, the TCC will engage after the shift to 3rd gear, and above approximately 35 MPH at light throttle.

OVERDRIVE OFF SWITCH

The Overdrive OFF Switch is located in the instrument panel. The O/D OFF switch is a momentary contact device that signals the TCM to toggle current status of the overdrive function. At Key-On, overdrive operation is allowed.

Pressing the switch once causes the O/D OFF mode to be entered, and the overdrive OFF switch lamp to be illuminated. If you press the switch a 2nd time, this causes normal overdrive operation to be restored and the overdrive lamp to turned off.

The normal position for the overdrive control switch is the ON position. The switch must be in this position to energize the OD solenoid and allow a 4th gear upshift to occur.

The control switch has an indicator lamp. The lamp illuminates when the overdrive switch is turned to the OFF position, or when illuminated by the TCM.

The overdrive switch indicator light is also used to flash fault codes for diagnostic purposes.

DIAGNOSTIC FAULT CODES

The lamp in the overdrive off switch is used to signal (Flash) the various fault codes. The fault codes and type of fault indicated are in the Fault Code Chart and shown in Figure 4.

~~TO VIEW FAULT CODES,~~ PROCEED AS FOLLOWS:

1. Turn ignition key ON and OFF, 3 times quickly, and remain in ON position.
2. Immediately begin counting the number of flashes displayed by O/D OFF switch indicator lamp.

[illegible] fault code indicated.

FAULT CODE	FAULT DESCRIPTION
11	Engine RPM input
12	Output shaft sensor input
13	Vehicle speed input
14	Governor pressure sensor input
15	Throttle position sensor input
16	Transmission fluid temperature input
17	Overdrive override (control) switch input
18	System voltage
19	Internal fault in module
21	Governor pressure solenoid output
22	Overdrive solenoid output
23	Converter clutch solenoid output
24	Overdrive override (control switch) lamp output
25	Internal fault in module
26	Governor pressure sensor offset drift
55	End of code transmission

Figure 4

ROAD TESTING

Before road testing, be sure the fluid level is correct and all cable adjustments have been checked, and adjusted if needed. Observe engine performance during the road test. A poorly tuned engine will not allow an accurate analysis of the transmission operation.

Operate the transmission in all gears. Be sure to check for shift variations and engine flare, which indicates slippage.

Slippage indicated by engine flare usually means clutch, band or overrunning clutch problems. If the condition is advanced, an overhaul may be necessary to restore normal operation.

A slipping clutch or band can usually be determined by comparing which internal components are applied in the various gears. The Application Chart in Figure 2 provides a basis for analyzing road test results.

CONVERTER CLUTCH ENGAGEMENT

The Torque Converter Clutch (TCC) is engaged by the TCC Solenoid on the valve body. The TCC can be engaged in 3rd and 4th gear, depending on the overdrive control switch position.

If the overdrive control switch is in the normal (ON) position, the TCC will engage after the shift to 4th gear, and above approximately 45 MPH.

If the overdrive control switch is in the OFF position, the TCC will engage after the shift to 3rd gear, and above approximately 35 MPH at light throttle.

OVERDRIVE OFF SWITCH

The Overdrive OFF Switch is located in the instrument panel. The O/D OFF switch is a momentary contact device that signals the TCM to toggle current status of the overdrive function. At Key-On, overdrive operation is allowed.

Pressing the switch once causes the O/D OFF mode to be entered, and the overdrive OFF switch lamp to be illuminated. If you press the switch a 2nd time, this causes normal overdrive operation to be restored and the overdrive lamp to turned off.

The normal position for the overdrive control switch is the ON position. The switch must be in this position to energize the OD solenoid and allow a 4th gear upshift to occur.

The control switch has an indicator lamp. The lamp illuminates when the overdrive switch is turned to the OFF position, or when illuminated by the TCM.

The overdrive switch indicator light is also used to flash fault codes for diagnostic purposes.

DIAGNOSTIC FAULT CODES

The lamp in the overdrive off switch is used to signal (Flash) the various fault codes. The fault codes and type of fault indicated are in the Fault Code Chart and shown in Figure 4.

TO VIEW FAULT CODES, PROCEED AS FOLLOWS:

1. Turn ignition key ON and OFF, 3 times quickly, and remain in ON position.
2. Immediately begin counting the number of flashes displayed by O/D OFF switch indicator lamp.
3. Refer to the chart in Figure 4 for the fault code indicated.

FAULT CODE	FAULT DESCRIPTION
11	Engine RPM input
12	Output shaft sensor input
13	Vehicle speed input
14	Governor pressure sensor input
15	Throttle position sensor input
16	Transmission fluid temperature input
17	Overdrive override (control) switch input
18	System voltage
19	Internal fault in module
21	Governor pressure solenoid output
22	Overdrive solenoid output
23	Converter clutch solenoid output
24	Overdrive override (control switch) lamp output
25	Internal fault in module
26	Governor pressure sensor offset drift
55	End of code transmission

Figure 4

ROAD TESTING

Before road testing, be sure the fluid level is correct and all cable adjustments have been checked, and adjusted if needed. Observe engine performance during the road test. A poorly tuned engine will not allow an accurate analysis of the transmission operation.

Operate the transmission in all gears. Be sure to check for shift variations and engine flare, which indicates slippage.

Slippage indicated by engine flare usually means clutch, band or overrunning clutch problems. If the condition is advanced, an overhaul may be necessary to restore normal operation.

A slipping clutch or band can usually be determined by comparing which internal components are applied in the various gears.

The Application Chart in Figure 2 provides a basis for analyzing road test results.

HYDRAULIC PRESSURE TEST

There are pressure test ports at the accumulator, front servo and rear servo. Also governor and overdrive clutch pressure can be checked with gauges.

Line pressure is checked at the accumulator test port, but must be in the drive position, as it is rear clutch oil that is being measured. Front clutch oil (3rd&Rev) is available at the front servo pressure port. All pressure port locations are seen in Figure 5.

Use the chart in Figure 6 to determine correct oil pressures. Use a 100 PSI gauge for testing line pressure and governor pressure. A 300 PSI gauge will be required for testing reverse.

Compare results of pressure tests with the analysis chart in Figure 7.

GOVERNOR PRESSURE TEST

This test checks governor operation by measuring governor oressure response to changes in vehicle speed. This test should be performed on a hoist that will allow the rear wheels to rotate freely.

1. Connect 100 PSI gauge to the governor pressure port (See Figure 5).
2. Start engine and place selector lever in the Drive position. At idle with the vehicle stopped, pressure should be 0 to 1-1/2 PSI maximum. If pressure does exceed this figure, a fault exists in the governor pressure control system.
3. Slowly increase engine speed, observe speedometer and pressure gauge. The governor pressure should increase in porportion to vehicle speed, or approximately 1 PSI for every 1 MPH.
4. Pressure should drop back to 0 to 1-1/2 PSI when wheels stop rotating.

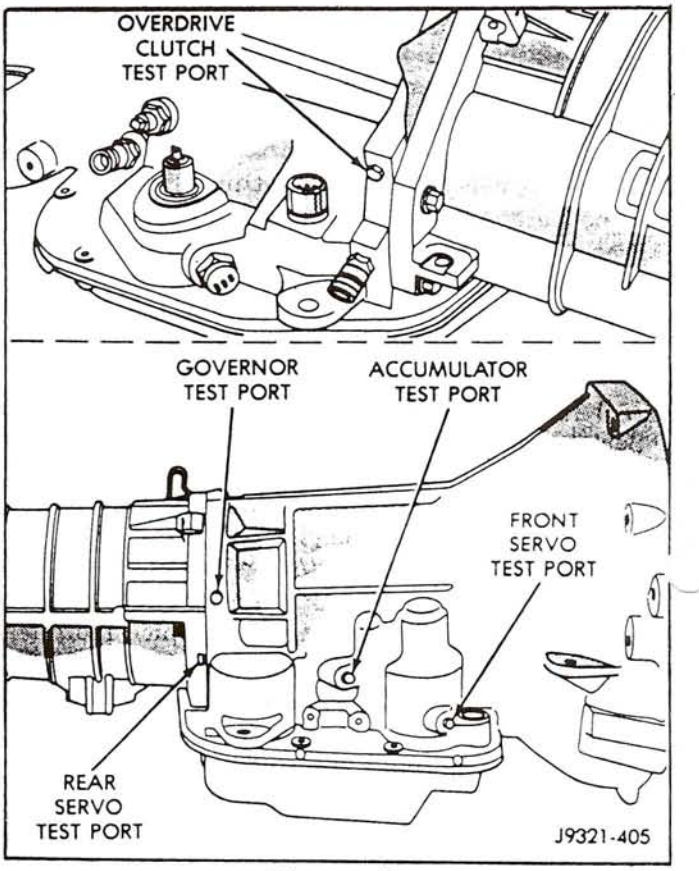

Figure 5

5. Compare results of pressure test with the analysis chart in Figure 7.

SHIFT LEVER POSITION	MINIMUM TV PRESSURE	MAXIMUM TV PRESSURE	TEST PORT	GAGE
DRIVE	55-65 PSI	90-96 PSI	ACCUMULATOR	100 PSI
MAN-2	55-65 PSI	90-96 PSI	ACCUMULATOR	100 PSI
MAN-1	55-65 PSI	90-96 PSI	ACCUMULATOR	100 PSI
REVERSE	145-175 PSI	230-280 PSI	REAR SERVO	300 PSI
D-4TH GEAR	68-72 PSI	90-120 PSI	OVERDRIVE	300 PSI

Figure 6

TEST CONDITION	INDICATION
Line pressure OK during any one test	Pump and regulator valve OK
Line Pressure OK in R but low in D, 2, 1	Leakage in rear clutch area (servo, clutch seals, governor support seal rings)
Pressure Low in D Fourth Gear Range	Overdrive clutch piston seal, or check ball problem
Pressure OK in 1, 2 but low in D3 and R	Leakage in front clutch area (servo, clutch seals, retainer bore, pump seal rings)
Pressure OK in 2 but low in R and 1	Leakage in rear servo
Front servo pressure low in 2	Leakage in servo; broken servo ring or cracked servo piston
Pressure low in all positions	Clogged filter, stuck regulator valve, worn or faulty pump, plugged fluid cooler
Governor pressure too high at idle speed	Governor pressure solenoid valve faulty
Governor pressure low at all mph figures	Faulty governor pressure solenoid, transmission control module, or governor pressure sensor
Lubrication/line pressure low at all throttle positions	Clogged fluid cooler or lines, seal rings leaking, output shaft plugged with debris, worn bushings in pump or clutch retainer

Figure 7

ELECTRONIC GOVERNOR COMPONENTS

Governor pressure is developed and controlled electronically in the 42RE. Refer to Figure 9 for component locations. The components used for the developement and control of governor pressure include:

- GOVERNOR BODY.
- VALVE BODY TRANSFER PLATE.
- GOVERNOR PRESSURE SOLENOID.
- GOVERNOR PRESSURE SENSOR.
- FLUID TEMPERATURE THERMISTER.
- TRANSMISSION SPEED SENSOR.
- THROTTLE POSITION SENSOR.
- TRANSMISSION CONTROL MODULE (TCM).

Refer to Figure 9 for component locations.

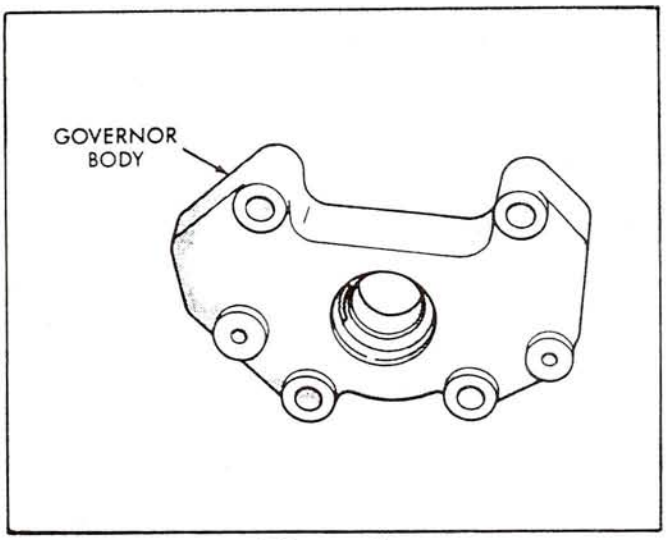

Figure 8

GOVERNOR BODY AND NEW TRANSFER PLATE

A new Transfer Plate is used with the 42RE valve body. The transfer plate is designed to supply line pressure to the governor pressure solenoid, and to return governor pressure to the valve body.

The governor pressure solenoid is mounted in the governor body, and the body is bolted to the lower side of the new transfer plate (See Figure 9).

TRANSMISSION SPEED SENSOR

The Transmission Speed Sensor is located in the overdrive gear case (See Figure 10). The sensor is positioned over the park gear and moniters transmission output shaft rotating speed. The sensor used with the 42RE transmission is the same as is used in the 41TE (A604) and 42LE (A606).

Speed sensor signals are triggered by the park gear lugs as they rotate past sensor pickup face. Input signals are sent to the transmission control module (TCM) for processing.

The vehicle speed sensor (VSS) also serves as a backup for the Transmission Speed Sensor. Signals from this sensor are shared with the powertrain control module (PCM).

THROTTLE POSITION SENSOR (TPS)

The TPS provides throttle position signals to both the TCM and PCM. This input signal is used to determine 3-4 and TCC shift schedule, and to select the proper governor curve, provided by the TCM.

ELECTRONIC GOVERNOR COMPONENT LOCATION

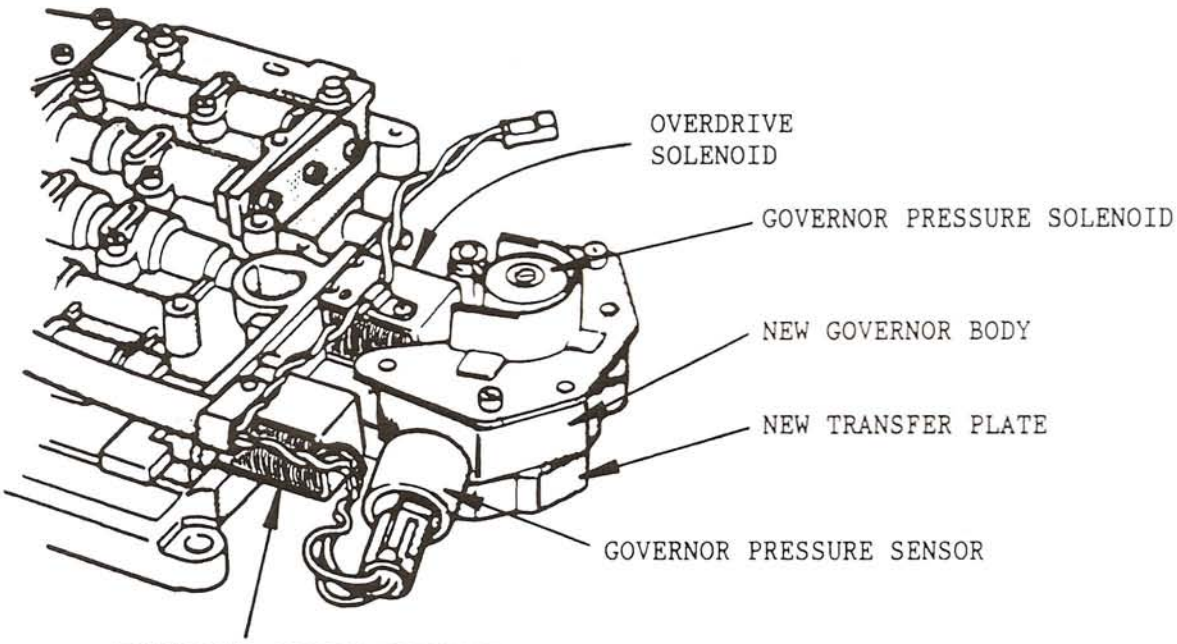

THERMISTER IS LOCATED ON THE UNDERSIDE OF THIS SOLENOID.

Figure 9

GOVERNOR PRESSURE CURVES

There are four governor pressure curves programed into the TCM. The four different governor curves allow the TCM to adjust governor pressure for varying conditions.

CURVE 1, is used for operation when fluid temperature is at, or below 30°F.

CURVE 2, is used for operation when fluid temperature is at, or above 31°F, during normal city, or highway driving.

CURVE 3, is used during wide open throttle operation.

CURVE 4 is used when driving with transfer case in 4WD Low range.

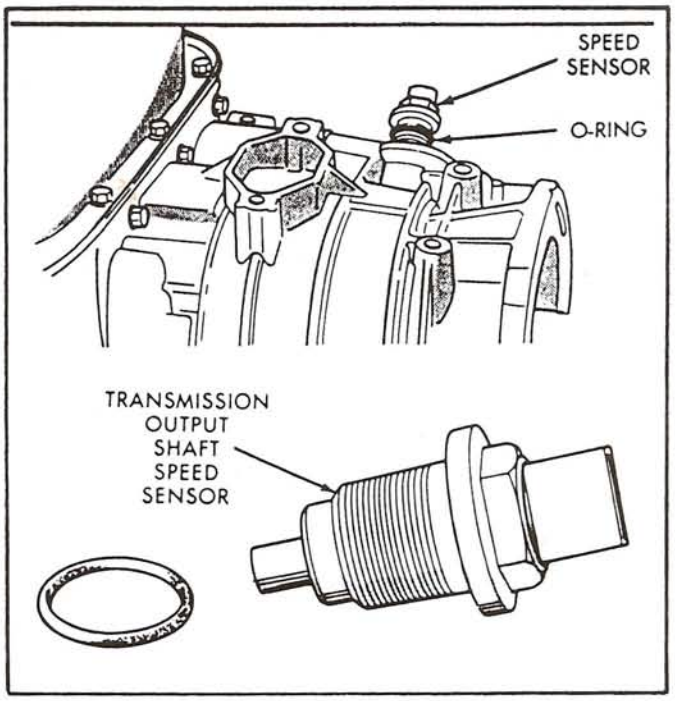

Figure 10

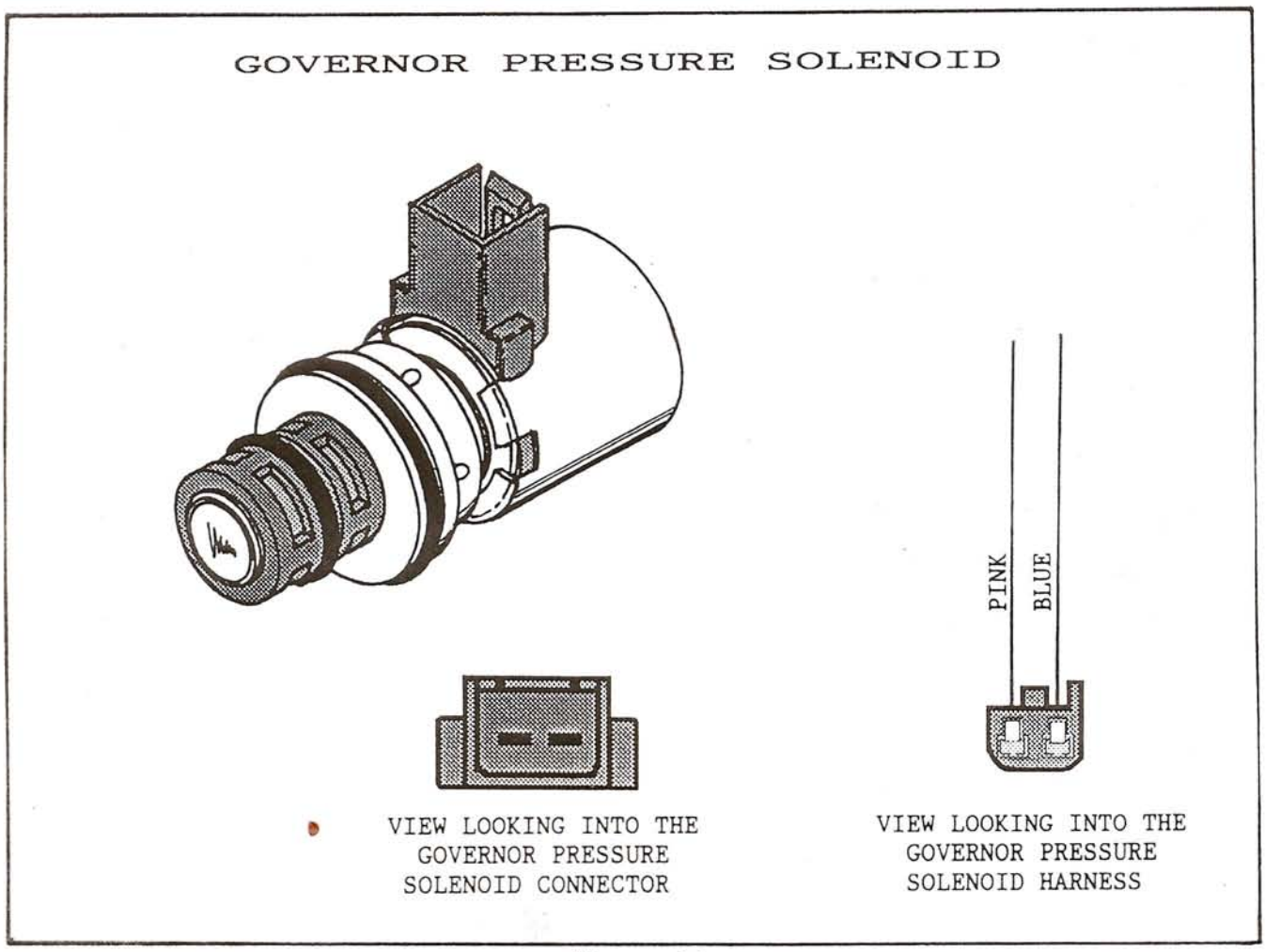

Figure 11

GOVERNOR PRESSURE SOLENOID

The Governor Pressure Solenoid generates the governor pressure needed for upshifts and down shifts. It is a Pulse Width Modulated (PWM) solenoid and is located in the governor body on the valve body transfer plate, as shown in Figure 9.

The inlet side of the solenoid is exposed to normal line pressure. The outlet side of the solenoid leads to the valve body governor circuit.

The solenoid regulates line pressure to produce governor pressure. The average current supplied to the solenoid, from the TCM, controls governor pressure. One Amp current produces zero (0) PSI governor pressure. Zero Amps sets the maximum governor pressure.

The Transmission Control Module (TCM) supplies electrical power, 12V (DC) to the governor pressure solenoid, and is provided through the battery terminal on the TCM.

The solenoid is polarity sensitive. The TCM energizes the solenoid by grounding it through the ground terminal on the TCM.

Refer to Figure 11 for the solenoid and its connector.

Refer to Figure 13 for complete vehicle wiring schematic for the transmission related components.

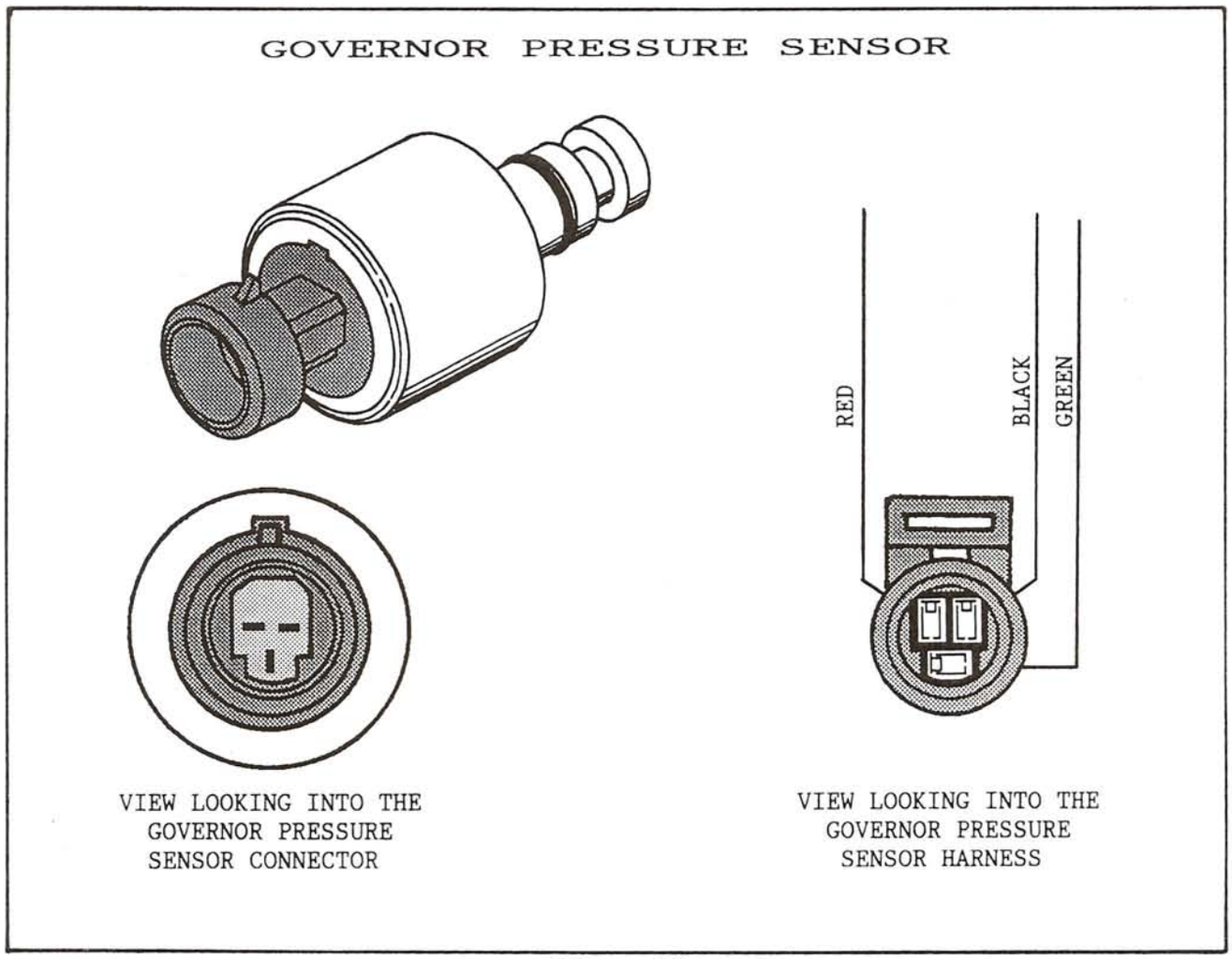

Figure 12

GOVERNOR PRESSURE SENSOR

The Governor Pressure Sensor output signal provides the necessary feedback to the TCM. This feedback information is needed by the TCM, to adequately control governor pressure for varying conditions.

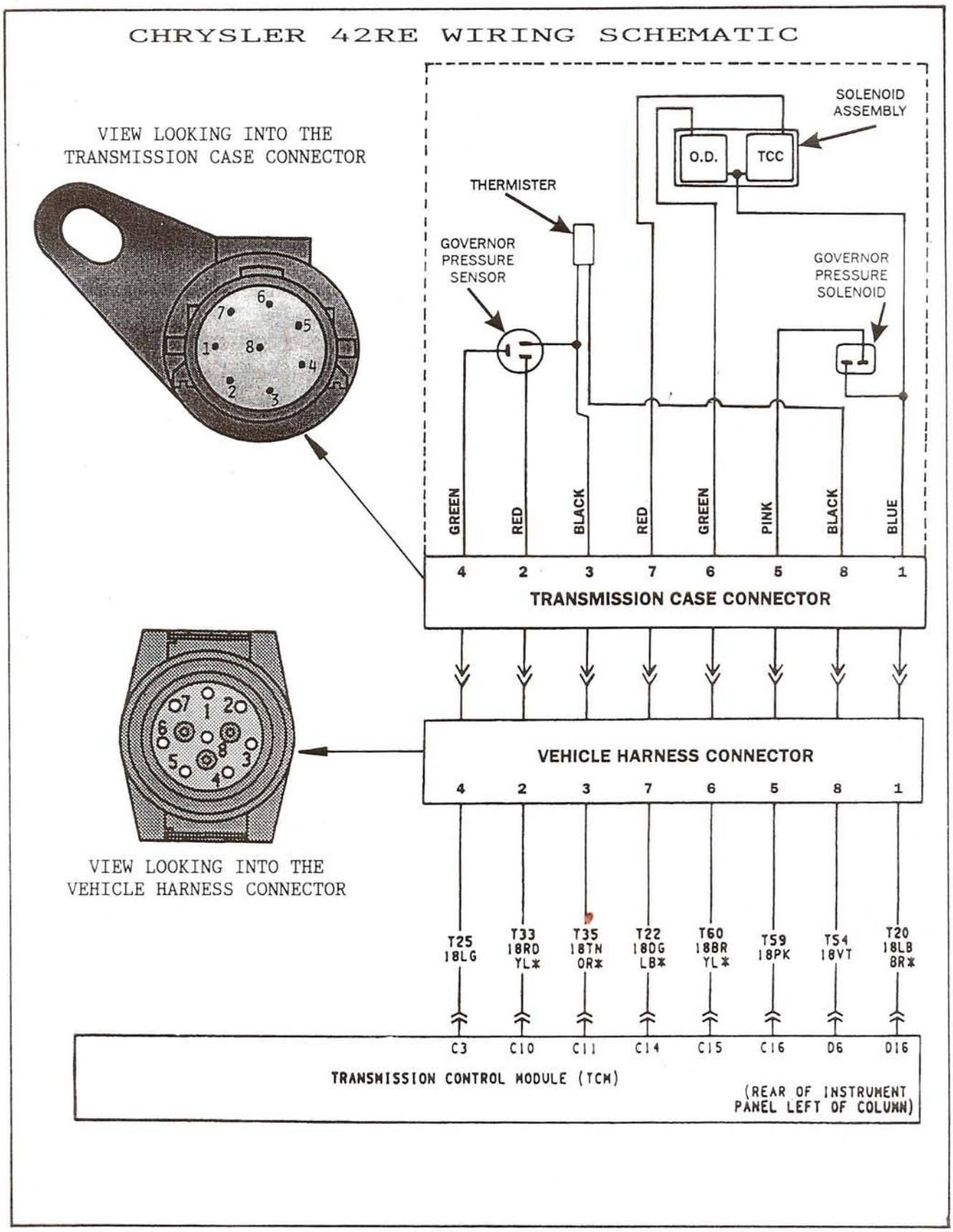
CHRYSLER 42RE WIRING SCHEMATIC
VIEW LOOKING INTO THE TRANSMISSION CASE CONNECTOR
SOLENOID ASSEMBLY
O.D.
TCC
THERMISTER
GOVERNOR PRESSURE SENSOR
GOVERNOR PRESSURE SOLENOID
GREEN
RED
BLACK
RED
GREEN
PINK
BLACK
BLUE
4 2 3 7 6 5 8 1
TRANSMISSION CASE CONNECTOR
VEHICLE HARNESS CONNECTOR
4 2 3 7 6 5 8 1
VIEW LOOKING INTO THE VEHICLE HARNESS CONNECTOR
T25 18LG
T33 18RD YL*
T35 18TN OR*
T22 18DG LB*
T60 18BR YL*
T59 18PK
T54 18VT
T20 18LB BR*
C3 C10 C11 C14 C15 C16 D6 D16
TRANSMISSION CONTROL MODULE (TCM)
(REAR OF INSTRUMENT PANEL LEFT OF COLUMN)

Figure 13

CASE CONNECTOR TERMINAL	FUNCTION
1	12V POWER IN FOR TCC, O.D., & GOVERNOR PRESSURE SOLENOID.
2	5V FEED TO GOVERNOR PRESSURE SENSOR.
3	GROUND FOR GOVERNOR PRESSURE SENSOR AND THERMISTER.
4	GOVERNOR PRESSURE SENSOR SIGNAL TO THE TCM.
5	GROUND (VARIABLE FORCE) TO GOVERNOR PRESSURE SOLENOID.
6	GROUND FROM TCM TO OVERDRIVE SOLENOID.
7	GROUND FROM TCM TO CONVERTER CLUTCH SOLENOID.
8	TEMP SENSOR (THERMISTER) SIGNAL TO THE TCM.

FLUID TEMPERATURE THERMISTER

Transmission fluid temperature readings are supplied to the TCM by the thermister (See Figure 13). The temperature readings are usedto control the 3-4 shift, the converter clutch, and governor pressure. The normal resistance value for the thermister at room temperature is approximately 1000 ohms.

The TCM prevents a 3-4 shift and prevents engagement of the converter clutch, when the fluid temperature is below approximate 30°F.

If fluid temperature exceeds 260°F, the TCM will cause a 4-3 downshift and engage the converter clutch. Engagement is now according to the 3rd gear converter clutch engagement schedule.

The overdrive OFF lamp on the instrument panel, also illuminates when the shift back to 3rd occurs. The TCM will not allow 4th gear operation until fluid temperature decreases to approximately 230°F.

The thermister is mounted on the underside of the converter clutch solenoid, as shown in Figure 9, and is immersed in fluid at all times.

OHMS READING CHART

THERMISTER	APPROX. 1000 Ohms at 70°F.
OVERDRIVE SOLENOID	25-40 Ohms at 70°F.
CONVERTER CLUTCH SOLENOID	25-40 Ohms at 70°F.
GOVERNOR PRESSURE SOLENOID	3.0-5.0 Ohms at 70°F.

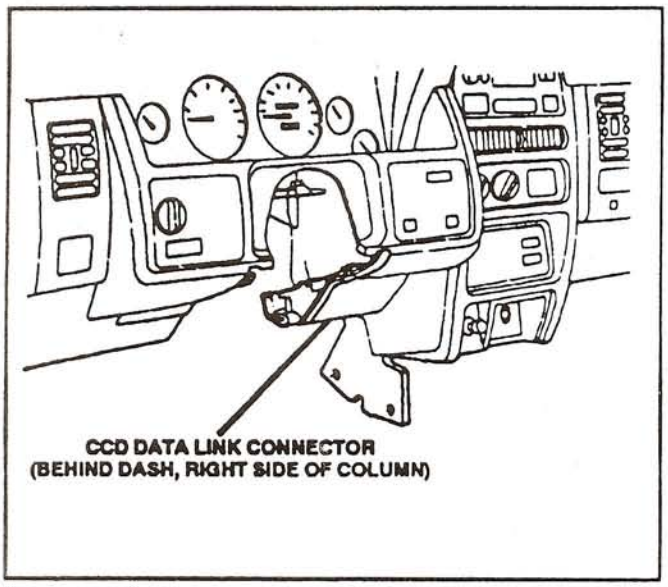

Figure 14

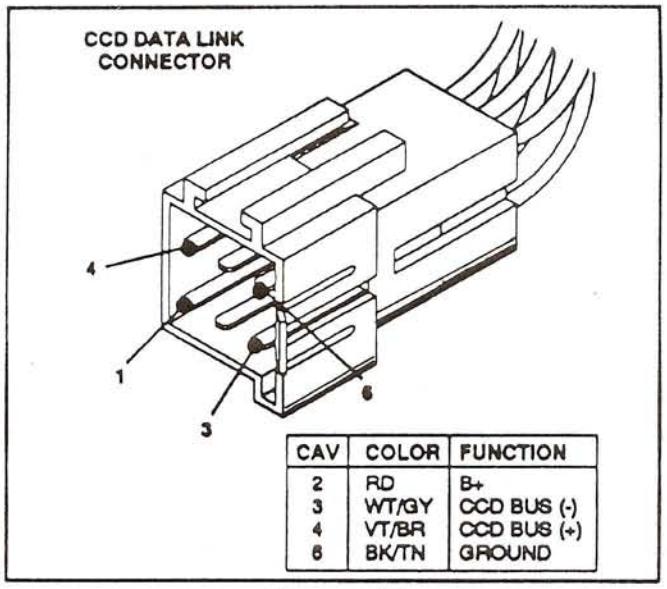

CAV	COLOR	FUNCTION
2	RD	B+
3	WT/GY	CCD BUS (-)
4	VT/BR	CCD BUS (+)
6	BK/TN	GROUND

Figure 15

TRANSMISSION CONTROL MODULE (TCM)

The TCM controls operation of the TCC Solenoid, the Overdrive Solenoid, and the Governor Pressure Solenoid. The TCM is located behind instrument panel to the left of the steering column (Figure 16).

The TCM determines transmission shift points based on input signals from the thermister, transmission speed sensor, crankshaft position sensor, vehicle speed sensor, and throttle position sensor.

Operating voltage is supplied through the battery terminal on the TCM. The ignition voltage signal is supplied through a terminal on the ABS control module.

The DRB II scan tool can be used to check operation of the TCM and transmission electrical components. The Diagnostic Connector for the scan tool is located under the instrument panel just to the right side of steering column (See Figure 14).

The Diagnostic Connector has a six-way terminal and is Blue in color (Figure 15).

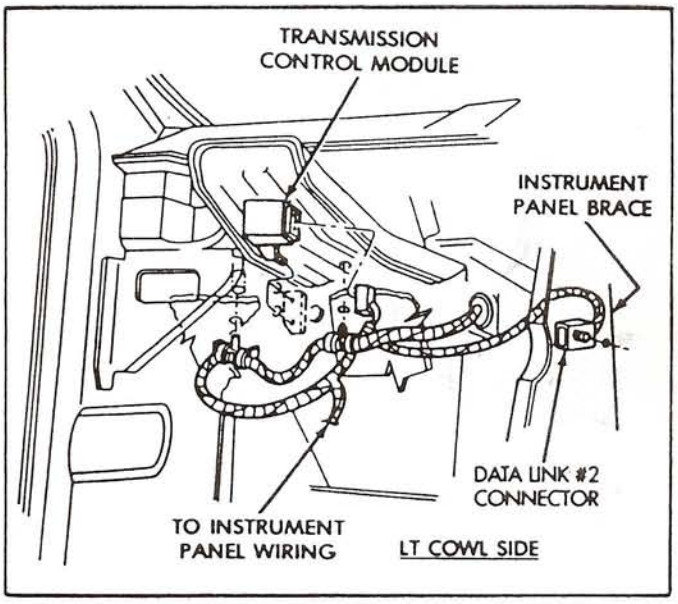

Figure 16

FAULT CODES ARE FOUND ON PAGE 6.

TRANSMISSION DIAGNOSIS

Condition	Possible Cause	Correction
HARSH ENGAGEMENT (FROM NEUTRAL TO DRIVE OR NEUTRAL TO REVERSE)	1. Engine idle speed too high	1. Check/adjust idle speed
	2. Driver "riding" accelerator pedal during shift	2. Advise owner/operator
	3. Throttle cable misadjusted or binding (reverse only)	3. Adjust cable setting
	4. Band adjustment needed	4. Adjust rear band
	5. Loose mounting bolts	5. Check engine, transmission, propeller shaft, crossmember, and axle bolt torque; tighten loose bolts and replace missing bolts
	6. Worn or damaged U-joints	6. Remove propeller shaft and replace U-joints
	7. Loose axle pinion nut	7. Replace nut and check pinion threads before installing new nut; replace pinion gear if threads are damaged
	8. Hydraulic pressure is incorrect	8. Check pressures; remove, overhaul, or adjust valve body as needed; repair oil pump if necessary
Note: The shift from neutral to reverse is normally quite firm. Hydraulic pressure at the rear servo can approach 300 psi in reverse gear. Do not confuse a firm engagement with a truly harsh engagement	9. Engine/transmission mounts worn or damaged	9. Replace as necessary
	10. Faulty converter lockup clutch (if equipped)	10. Replace converter and flush cooler and lines before installing new converter
	11. Clutch, band, or planetary component is damaged	11. Remove, disassemble, and repair transmission as necessary
DELAYED ENGAGEMENT (FROM NEUTRAL TO DRIVE OR REVERSE)	1. Engine idle speed too low	1. Adjust idle speed
	2. Low fluid level	2. Correct level and check for leaks
	3. Gearshift linkage out of adjustment	3. Adjust linkage and repair linkage if worn or damaged
	4. Rear band out of adjustment	4. Adjust band
	5. Valve body filter plugged	5. Replace fluid and filter. If oil pan and old fluid were full of clutch disc material and/or metal particles, overhaul will be necessary
	6. Oil pump gears worn or damaged or pump body or seal is damaged, allowing pump to take in air, causing fluid aeration	6. Remove transmission and replace oil pump
	7. Reaction shaft seal rings worn or broken	7. Remove transmission, remove oil pump, and replace seal rings
	8. Governor pressure solenoid valve or electrical circuit fault	8. Check electrical functions with DRB scan tool or flash codes and repair as necessary
	9. Low hydraulic pressure	9. Perform pressure test, remove transmission, and repair as needed
	10. Clutch, band, or servo damaged	10. Remove and disassemble transmission and repair as necessary
	11. Torque converter drain down after several days out of service	11. No repair required

Figure 17

TRANSMISSION DIAGNOSIS

Condition	Possible Cause	Correction
NO DRIVE RANGE (REVERSE OK)	1. Gearshift linkage either loose, damaged or out of adjustment	1. Repair or replace linkage components
	2. Low fluid level	2. Correct fluid level and check for leaks
	3. Valve body malfunction (manual valve or shaft damaged or 1-2 shift valve stuck)	3. Remove and disassemble valve body; replace as assembly if any valves or bores are damaged
	4. Rear clutch failure	4. Remove and disassemble transmission and rear clutch; repair/replace worn, damaged parts as needed
	5. Transmission overrunning clutch failure	5. Remove and disassemble transmission; replace overrunning clutch
	6. Input shaft seal rings worn or damaged	6. Remove and disassemble transmission; replace seal rings and any other worn or damaged parts
NO DRIVE *OR* REVERSE (VEHICLE WILL NOT MOVE)	1. Low fluid level	1. Add fluid and check for leaks if drive is restored
	2. Gearshift linkage loose, damaged, or misassembled	2. Inspect, adjust, and reassemble linkage as needed; replace worn, damaged parts
	3. Failure of driveline component, such as U-joint, axle shaft, transfer case component, etc.	3. Perform preliminary inspection procedure for vehicle that will not move; refer to procedure in diagnosis section
	4. Low fluid pressure due to worn or damaged oil pump	4. Perform pressure test to confirm low pressure; replace pump body and/or gears if necessary
	5. Transmission internal component damaged	5. Remove and disassemble transmission; repair or replace failed components as needed
	6. Valve body malfunction (seized valve, damaged manual lever, valve body screws loose or overtightened causing distortion and bind)	6. Remove, disassemble, and inspect valve body; replace valve body (as assembly) if any valve or bore is damaged; clean and reassemble correctly if all parts are in good condition

Figure 18

TRANSMISSION DIAGNOSIS

Condition	Possible Cause	Correction
SHIFTS DELAYED OR ERRATIC (SHIFTS ALSO HARSH AT TIMES)	1. Low fluid level	1. Correct fluid level and check for leaks
	2. Throttle cable out of adjustment	2. Adjust cable as described in service section
	3. Throttle cable binding	3. Adjust cable, replace if worn or damaged
	4. Gearshift linkage out of adjustment	4. Adjust linkage as described in service section
	5. Fluid filter partially clogged	5. Replace filter. If filter and fluid contained clutch material or metal particles, an overhaul may be necessary
	6. Air in fluid due to overfill condition or air leakage into pump suction passages	6. Drain fluid to correct level if overfilled. If fluid is highly aerated (full of bubbles and foamy), oil pump gasket or seal may have failed, or pump body is porous or cracked
	7. Clutch or servo problem	7. Remove valve body and air test clutch, band and servo operation; disassemble and repair transmission as needed
	8. Front band out of adjustment (may cause harsh 1-2 shift)	8. Adjust band
	9. Accumulator springs/seals worn or damaged	9. Inspect/replace as required
	10. Governor pressure control system fault	10. Check with DRB II scan tool or flash codes and repair as necessary
NO REVERSE (D RANGES OK) НЕТ ЗАДНЕГО ХОДА ПЕРЕДНИЕ В ПОРЯДКЕ	1. Gearshift linkage is either out of adjustment or damaged	1. Repair or replace linkage parts as needed
	2. Rear band is out of adjustment	2. Adjust band
	3. Valve body malfunction (stuck/damaged manual valve, regulator valve, or check ball)	3. Remove and service valve body; replace valve body if any valves or valve bores are worm or damaged
	4. Rear servo or front clutch malfunction	4. Remove and disassemble transmission; replace worn, damaged servo and clutch parts as necessary
	5. Overdrive unit direct clutch malfunction	5. Remove and disassemble overdrive unit. Repair direct clutch as needed
HAS FIRST-REVERSE ONLY (NO 1-2 OR 2-3 UPSHIFT)	1. Governor component fault	1. Test electrical components with DRB II scan tool or flash codes and repair as needed
	2. Front servo problem	2. Pressure check and repair as needed

Figure 19

TRANSMISSION DIAGNOSIS

Condition	Possible Cause	Correction
MOVES IN 2ND OR 3RD GEAR, ABRUPTLY DOWNSHIFTS TO LOW	1. Governor circuit fault 2. Valve body malfunction	1. Test governor components with DRB II scan tool 2. Remove, clean, and inspect; look for stuck 1-2 valve or governor plug
SLIPS IN LOW GEAR D ONLY, BUT NOT IN 1 POSITION	1. Transmission overrunning clutch faulty, not holding	1. Replace overrunning clutch
SLIPS FORWARD DRIVE RANGES	1. Low fluid level 2. Air in fluid (fluid is foamy, full of bubbles), shifts are spongy, caused by air getting into pump suction passages 3. Gearshift linkage or throttle cable out of adjustment 4. Low hydraulic pressure due to worn pump, incorrect control pressure adjustment, valve body warpage or malfunction, sticking governor, leaking seal rings, clutch seals leaking, servo leaks, clogged filter, or cooler lines 5. Accumulator piston cracked, spring broken or seal worn 6. Clutch or servo malfunction, leaking seals or worn plates 7. Overrunning clutch worn, not holding (slips in 1 only)	1. Add fluid and check for leaks 2. Check for bad pump gasket or seals, dirt between pump halves, and loose pump bolts or defective O-ring at filler tube 3. Adjust as needed 4. Perform hydraulic and air pressure tests to determine cause 5. Inspect and repair as necessary 6. Air pressure check clutch-servo operation and repair as required 7. Replace clutch
SLIPS IN REVERSE ONLY	1. Low fluid level 2. Aerated fluid; see Slips in forward Drive Ranges 3. Gearshift linkage out of adjustment 4. Rear band out of adjustment 5. Hydraulic pressure too low due to worn pump, worn seal rings, clutch or servo seal leakage 6. Worn front clutch, leaking rear servo, or worn rear band 7. Band-linkage binding 8. Overdrive unit direct clutch slipping	1. Add fluid and check for leaks 2. See Slips in Forward Drive Ranges 3. Adjust linkage 4. Adjust band 5. Perform hydraulic pressure tests to determine cause 6. Air pressure check clutch-servo operation and repair as required 7. Inspect and repair as required 8. Remove and disassemble overdrive unit. Repair clutch as needed

Figure 20

TRANSMISSION DIAGNOSIS

Condition	Possible Cause	Correction
NO KICKDOWN OR NORMAL DOWNSHIFT	1. Incorrect throttle cable adjustment 2. Incorrect gear shift linkage adjustment 3. Front band out of adjustment 4. Hydraulic pressure too high or too low due to valve body malfunction, or incorrect hydraulic control pressure adjustment 5. Front servo, band, or linkage malfunction 6. Clutch or servo malfunction 7. Governor fault 8. TPS fault	1. Adjust cable 2. Adjust linkage 3. Adjust band 4. Perform hydraulic pressure tests to determine cause and repair as required. Correct valve body pressure adjustments as required 5. Air pressure test operation and repair as necessary 6. Air pressure test operation and repair as necessary 7. Check with DRB II scan tool or flash codes and repair as needed 8. Check for TPS fault at transmission control module with DRB II scan tool or flash codes
STUCK IN LOW GEAR (WILL NOT UPSHIFT)	1. Gearshift linkage or throttle cable out of adjustment. 2. Front band out of adjustment 3. Governor component fault, loose output shaft support, worn pump, leaking seal rings, or valve body problem (i.e., stuck 1-2 shift valve or governor plug) 4. Clutch or servo malfunction	1. Adjust and repair linkage or cable if worn or damaged 2. Adjust band 3. Check operating pressures, and test governor component with DRB II scan tool or flash codes. Repair as needed 4. Air pressure check operation of clutches and bands; repair faulty component
NO LOW GEAR (MOVES IN 2ND OR 3RD GEAR ONLY)	1. Governor circuit fault 2. Valve body malfunction 3. Front servo piston cocked in bore 4. Front band linkage malfunction 5. Incorrect throttle or gearshift linkage adjustment	1. Test governor components with DRB II scan tool 2. Remove, clean, and inspect. Look for sticking 1-2 valve, 2-3 valve, governor plug, or broken springs 3. Inspect servo and repair as required 4. Inspect linkage and look for bind in linkage 5. Adjust linkage

Figure 21

TRANSMISSION DIAGNOSIS

Condition	Possible Cause	Correction
CREEPS IN NEUTRAL	1. Gearshift linkage out of adjustment 2. Valve body malfunction (warped body, cross leakage, loose screws) 3. Clutch dragging	1. Adjust linkage 2. Perform hydraulic pressure test to determine cause and repair as required 3. Air pressure check operation of clutches and repair as required
DRAGS OR LOCKS UP	1. Front or rear band out of adjustment 2. Servo band or linkage malfunction (i.e., binding linkage, warped band, servo piston stuck) 3. Dragging clutch (does not release fully) 4. Broken or seized planetary gears 5. Overrunning clutch worn, broken, or seized	1. Adjust bands 2. Air pressure check servo operation and repair as required 3. Air pressure check clutch operation and repair as required 4. Remove, inspect, and repair as required (look for debris in oil pan) 5. Remove and inspect clutch, repair as required
GROWLING, GRATING OR SCRAPING NOISES	1. Planetary gear set broken or seized 2. Overrunning clutch worn, seized, or broken 3. Oil pump components scored, binding, or broken 4. Output shaft bearing or bushing damaged 5. Faulty clutch operation 6. Front and rear bands out of adjustment	1. Check for debris in oil pan and repair as required 2. Inspect and check for debris in oil pan; repair as required 3. Remove, inspect, and repair as required 4. Remove, inspect, and repair as required 5. Perform air pressure check and repair as required 6. Adjust bands
BUZZING NOISE	1. Low fluid level 2. Air being drawn into pump suction passages 3. Overrunning clutch damaged 4. Valve body misassembled, bolts loose, weak spring, or mispositioned valve or check ball	1. Add fluid and check for leaks 2. Check pump for porous casting, scores on mating surfaces, and excess rotor clearance; repair as required 3. Replace clutch 4. Remove, disassemble, inspect valve body; reassemble correctly if necessary; replace assembly if valves or springs are damaged

Figure 22

TRANSMISSION DIAGNOSIS

Condition	Possible Cause	Correction
OIL COMES OUT FILLER TUBE	1. Transmission overfilled	1. Drive fluid to correct level; remove neutral switch and drain through switch hole with suction gun
	2. Breather vent in oil pump blocked	2. Inspect and clear blockage
	3. Fluid cooler or cooler lines plugged	3. Flush cooler and lines
	4. Air in fluid (aerated)	4. See "Slips In Forward Drive Ranges"
	5. Oil filter clogged	5. Replace filter; determine the reason for clogged condition and repair
	6. Rear servo piston or seal failure	6. Check hydraulic pressure of servo in reverse (will register low or fluctuate rapidly). Repair/replace servo piston and seal. Replace case if servo bore is damaged
	7. Valve body switch valve sticking	7. Remove and clean valve
OIL LEAKS (ITEMS LISTED REPRESENT POSSIBLE LEAK POINTS AND SHOULD ALL BE CHECKED)	1. Speedometer adapter	1. Replace both adapter seals
	2. Pan gasket	2. Tighten pan screws to 150 inch-pounds; if leaks persist, replace gasket; **do not overtighten screws**
	3. Filler tube (where tube enters case)	3. Replace O-ring seal
	4. Fluid lines and fittings	4. Tighten fittings; if leaks persist, replace fittings and lines if necessary
	5. Valve body manual lever shaft seal	5. Replace shaft seal
	6. Pressure port plug loose	6. Tighten to correct torque; replace plug if leak persists
	7. Rear bearing access plate	7. Replace gasket
	8. Gasket damaged or bolts are loose	8. Replace bolts or gasket or tighten bolts
	9. Adapter/extension gasket damaged	9. Replace gasket
	10. Neutral switch	10. Replace switch and gasket
	11. Converter housing area	11. Check for leaks at seal caused by worn seal or burr on converter hub (cutting seal), worn bushing, missing oil return, oil in front pump housing, or hole plugged. Check for leaks past O-rign seal on pump, or past pump-to-case bolts; pump housing porous, oil coming out vent due to overfill or leak past front band shaft access plug
	12. Cooler line fittings and hoses	12. Replace fittings and hoses
	13. Pump seal	13. Replace seal
	14. Torque converter	14. Replace converter

Figure 23

TRANSMISSION DIAGNOSIS

Condition	Possible Cause	Correction
OVERHEAT DURING COMMERCIAL OPERATION OR WHILE TRAILER TOWING (FLUID DARK AND BURNED WITH SOME SLUDGE FORMATION)	1. Vehicle not properly equipped for trailer towing or commercial use	1. Be sure vehicle is equipped with recommended optional components (i.e., HD springs, transmission, axle, larger CID engine, auxiliary cooler, correct axle ratio, etc.). If vehicle is not s equipped, it should not be used for severe service operation
	2. Vehicle not equipped with auxiliary fluid cooler	2. Drain fluid, change filter, and install auxiliary cooler
	3. Extensive idling time or operation in heavy traffic in hot weather	3. Cut down on idling time; shift into neutral every so often and run engine at 1000 rpm to help circulate fluid through cooler
	4. Tow vehicle overloaded (exceeding vehicle tow capacity)	4. Be sure vehicle is properly equipped to handle load; do not tow Class III-type loads with a vehicle that is only rated for Class I or II operation
	5. Air flow to auxiliary cooler blocked by snow plow, front mounted spare tire, bug screen, or similar item	5. Remove or reposition item causing air flow blockage
OVERHEAT DURING NORMAL OPERATION (FLUID DISCOLORED, SMELLS BURNED)	1. Low fluid level	1. Add fluid and check for leaks
	2. Fluid cooler, lines blocked, or cooler cracked (oil in engine coolant)	2. Flush cooler and lines and replace radiator if transmission fluid has entered coolant
	3. Switch valve sticking	3. Remove, disassemble, clean valve body
	4. Clutch pack clearance incorrect (too tight)	4. Check and correct as required
	5. Bands too tight	5. Adjust bands

Figure 24

TRANSMISSION DIAGNOSIS

Condition	Possible Cause	Correction
NO START IN PARK OR NEUTRAL	1. Gearshift linkage out of adjustment 2. Park/neutral position switch wire broken or open 3. Faulty park/neutral position switch 4. Valve body manual lever assembly bent, worn, broken, or not aligned with switch	1. Adjust linkage 2. Check continuity with test lamp; repair as required 3. Refer to service section for test and replacement procedure 4. Inspect lever assembly and replace if damaged
SLUGGISH ACCELERATION AT LOW SPEEDS OR REQUIRES EXCESSIVE THROTTLE OPENING TO MAINTAIN HIGHWAY SPEEDS	1. Poor engine performance 2. Gearshift linkage or throttle cable out of adjustment 3. Transmission clutches slipping 4. Overrunning clutch in converter stator not holding 5. Converter stator overrunning clutch seized	1. Check engine and repair as required 2. Adjust as needed 3. Perform stall test and repair as required 4. Perform stall test and replace converter if clutch has failed 5. Replace converter as assembly
FLUID CONTAMINATED (DISCOLORED, FULL OF SLUDGE AND/OR METAL AND FRICTION MATERIAL PARTICULAR)	1. If contamination occurred shortly after overhaul, fluid cooler and lines were not flushed and flow tested. This is especially true when original overhaul was to correct a problem that generated a large amount of debris, such as a gear failure or a clutch pack failure Note: Flushing the cooler and lines is mandatory after a failure of the converter clutch 2. Incorrect fluid used in transmission 3. Main cooler in radiator is cracked, allowing engine coolant to enter transmission 4. Severe overload results in overheat, fluid breakdown, and accelerated wear, especially in high ambient temperatures. Most frequent causes are: • Vehicle is not properly equipped for heavy duty service • Tow vehicle and boat or trailer are both overloaded • Trailer or boat are too large for tow vehicle (load exceeds rated capacity of tow vehicle)	1. If contamination is severe, cooler flushing, converter replacement, and another overhaul may be necessary; particularly if shift problems were also present. 2. If transmission is operating properly, drain fluid, reverse flush cooler and lines, and change fluid and filter. However, if shift problem has developed, converter replacement and transmission overhaul may be required. 3. Replace radiator (and cooler) and flush lines. If problem was diagnosed early enough, fluid and filter change may only be necessary. If contamination period was prolonged, overhaul and converter replacement may be required 4. Repair transmission, flush cooler, and lines. Replace converter if necessary. Install auxiliary cooler if needed. Also install HD cooling system if needed. if tow vehicle and unit being towed are both overloaded, the only repair is to reduce the load to rated limits. However, if trailer or boat is too large for two vehicle, the only option is for the owner to move up to properly-equipped and load-rated tow vehicle

FIGURE 25

TRANSMISSION DIAGNOSIS

Condition	Possible Cause	Correction
NO 3-4 UPSHIFT	1. Fourth gear overdrive switch (in dash) in OFF position	1. Turn control switch to ON position
	3. Fourth gear overdrive switch shorted, open, wires loose	3. Replace switch if shorted or open and repair loose or damaged wires
	4. Overdrive solenoid or circuit wire loose, shorted, open	4. Check wires/connections with 12V test lamp and voltmeter; repair damaged or loose wires/connections as necessary
	5. Solenoid feed orifice in valve body is blocked or blown out	5. Remove, disassemble, clean valve body thoroughly
	6. Fourth gear overdrive solenoid failure	6. Verify solenoid failure with test lamp and replace solenoid
	7. Sensor or fluid temperature thermister fault	7. Test with DRB II scan tool or ohmmeter. Replace sensor or thermister as needed
	8. Overdrive piston seal failure	8. Replace both seals
	9. Wrong overdrive piston spacer	9. Remove unit, check end play, and install correct spacer
	10. Low hydraulic pressure	10. Pressure test transmission to determine cause
	11. Transmission fluid overheat (over 260 °F)	11. See overheat information in transmission diagnosis charts
SLIPS IN OVERDRIVE FOURTH GEAR	1. Low fluid level	1. Add fluid and check for leaks
	2. Overdrive piston or seal malfunction	2. Remove overdrive unit; replace piston se if worn; replace piston if damaged; if piston retainer is damaged, it will be necessary to remove and disassemble th transmission
	3. Overdrive clutch pack worn	3. Remove overdrive unit and rebuild clutch p
	4. 3-4 shift valve, timing valve, or accumulator malfunction	4. Remove and overhaul valve body. Repl accumulator seals. Make sure all valves operate freely in bores and do not bind stick. Make sure valve body screws are correctly tightened and separator plate are properly positioned.
	5. Overdrive piston retainer bleed orifice blown out	5. Disassemble transmission, remove retair and replace orifice
	6. Overdrive unit thrust bearing failure	6. Disassemble overdrive unit and replace thrust bearing (No. 1 thrust bearing is between overdrive piston and clutch hu No. 2 thrust bearing is between the planetary gear and the direct clutch sp plate; No. 3 thrust bearing is between overrunning clutch hub and output shaf

Figure 26

TRANSMISSION DIAGNOSIS

Condition	Possible Cause	Correction
DELAYED 3-4 UPSHIFT (SLOW TO ENGAGE)	1. Low fluid level 2. Overdrive solenoid or wiring is faulty 3. Overdrive piston spacer too thin 4. Overdrive clutch pack worn 5. T.P.S. faulty 6. Overdrive clutch bleed orifice in retainer plugged or blown out	1. Add fluid and check for leaks 2. Test solenoid and check wiring for loose/corroded connections, or shorts/ground; replace solenoid if faulty and repair wiring if necessary 3. Remove unit; measure end play and select proper spacer 4. Remove unit and rebuild clutch pack 5. Replace T.P.S. 6. Disassemble transmission and replace orifice
3-4 UPSHIFT OCCURS BEFORE COMPLETION OF 2-3 UPSHIFT	1. Overdrive solenoid connector or wiring problem 2. Overdrive solenoid malfunction 3. Coolant temperature or T.P.S. malfunction 4. Valve body malfunction 5. Transmission control module malfunction	1. Test connector and wiring for loose connections, shorts, or ground, and repair as needed 2. Replace solenoid 3. Test sensor at TCM with DRB II scan tool and replace as necessary 4. Remove, disassemble, clean, and inspect valve body components; make sure all valves and plugs slide freely in bores; polish valves with crocus cloth if needed 5. Test module with DRB II scan tool and replace if faulty

Figure 27

TRANSMISSION DIAGNOSIS

Condition	Possible Cause	Correction
NO 4-3 DOWNSHIFT	1. Circuit wiring and/or connectors shorted	1. Test wiring and connectors with test lamp and volt/ohmmeter; repair wiring as necessary; replace connectors and/or harness as required
	2. Converter clutch solenoid not venting	2. Remove valve body and replace solenoid if seized or shorted
	3. Overdrive solenoid not venting	3. Remove valve body and replace solenoid if seized or shorted
	4. 3-4 shift or accumulator malfunction	4. Remove valve body; remove and disassemble lower housing and 3-4 accumulator housing; replace seals and clean valves as necessary; be sure all valves slide freely in bores
	5. Transmission control module malfunction	5. Check operation with DRB II scan tool, replace module only if faulty
	6. T.P.S. malfunction	6. Check operation with DRB II scan tool. Replace TPS only if faulty
NO 4-3 DOWNSHIFT WHEN CONTROL SWITCH IS TURNED OFF (OVERDRIVE OFF AND LAMP IS ILLUMINATED)	1. Overdrive solenoid wiring or connectors faulty	1. Check solenoid wiring and connections for shorts/grounds; repair as necessary
	2. Overdrive or lockup solenoid not venting	2. Test solenoids and replace if seized or shorted
	3. Transmission control module	3. Test with DRB II scan tool, replace controller if faulty
NO 4-3 DOWNSHIFT WHEN OVERDRIVE OFF SWITCH IS TURNED OFF (OVERDRIVE OFF AND LAMP NOT ILLUMINATED)	1. Overdrive off switch (in dash) open, shorted, or wiring is open, or shorted	1. Test switch function with DRB II scan tool connected to TCM. Replace switch or repair wiring as necessary

Figure 28

TRANSMISSION DIAGNOSIS

Condition	Possible Cause	Correction
HARSH 1-2, 2-3, OR 3-2 SHIFTS. MAY STALL WHEN GEAR SHIFT LEVER IS PLACED IN D POSITION ONLY	1. Converter clutch solenoid failure	1. Remove valve body and replace solenoid
TORQUE CONVERTER CLUTCH ENGAGES IN SECOND AND/OR THIRD GEAR	1. Converter clutch solenoid or wiring problem	1. Test solenoid and wiring for continuity, shorts, or grounds; replace solenoid and relay if faulty; repair wiring and connectors as necessary
NOISY OPERATION IN FOURTH GEAR ONLY	1. Overdrive clutch discs, plates, or snap rings damaged 2. Overdrive piston or planetary thrust bearing brinnelled, installed wrong, or damaged 3. Output shaft bearings brinnelled, scored, damaged 4. Planetary gears worn, chipped, damaged 5. Overdrive unit overrunning clutch rollers rough, scored, or output bushings are worn	1. Remove unit and rebuild clutch pack 2. Remove and disassemble unit; replace either thrust bearing if damaged 3. Remove and disassemble unit; replace either bearing if damaged 4. Remove and overhaul overdrive unit 5. Remove and overhaul overdrive unit

Figure 29

TRANSMISSION DIAGNOSIS

Condition	Possible Cause	Correction
NO REVERSE (OR SLIPS IN REVERSE)	1. Direct clutch spring collapsed or broken 2. Direct clutch pack worn 3. Rear band out of adjustment 4. Front clutch malfunction 5. Overdrive thrust bearing failure	1. Remove and disassemble unit; check clutch pack and replace spring 2. Disassemble unit and rebuild clutch pack 3. Adjust band 4. Air pressure test clutch operation; remove and rebuild if necessary 5. Disassemble geartrain and replace bearings
NO 1-2 OR 2-3 UPSHIFT (HAS LOW AND REVERSE ONLY)	1. Governor fault	1. Test governor components with DRB II scan tool and repair as needed

Figure 30

CONVERTER CLUTCH DIAGNOSIS

POSSIBLE CAUSE	CONDITION																					
	CONVERTER CLUTCH WILL NOT ENGAGE	CLUTCH WILL NOT DISENGAGE	STAYS ENGAGED AT TOO LOW A SPEED IN 4th GEAR	LOCKS UP OR DRAGS IN LOW OR SECOND	STALLS OR IS SLUGGISH IN REVERSE	CHATTER DURING CLUTCH ENGAGEMENT-(COLD)	VIBRATION OR SHUDDER DURING CLUTCH ENGAGEMENT	VIBRATION AFTER CLUTCH ENGAGEMENT	VIBRATION WHEN "REVVED" IN NEUTRAL	OVERHEATING: OIL COMING OUT OF FILL TUBE OR PUMP SEAL	SHUDDER AFTER CLUTCH ENGAGEMENT
FAULTY OIL PUMP	X			X	X		X				X
STICKING GOVERNOR VALVE	X	X	X								
PLUGGED COOLER, LINES OR FITTINGS					X					X	X
VALVE BODY MALFUNCTION	X	X	X	X	X		X				X
STUCK SWITCH VALVE	X	X	X	X	X					X	
STUCK CONVERTER CLUTCH VALVE	X	X	X								
STUCK CONVERTER CLUTCH SOLENOID	X		X								
SOLENOID WIRING DISCONNECTED	X										
FAILED CONVERTER CLUTCH SOLENOID	X										
FAILED CONVERTER CLUTCH RELAY	X		X								
FAULTY TORQUE CONVERTER:	X					X	X	X			X
OUT OF BALANCE									X		
FAILED CONVERTER CLUTCH	X					X					X
LEAKING TURBINE HUB SEAL	X					X					
ALIGN EXHAUST SYSTEM								X			X
TUNE ENGINE							X	X			X
FAULTY INPUT SHAFT OR SEAL RING	X				X						
THROTTLE CABLE MISADJUSTED								X			X

Figure 31

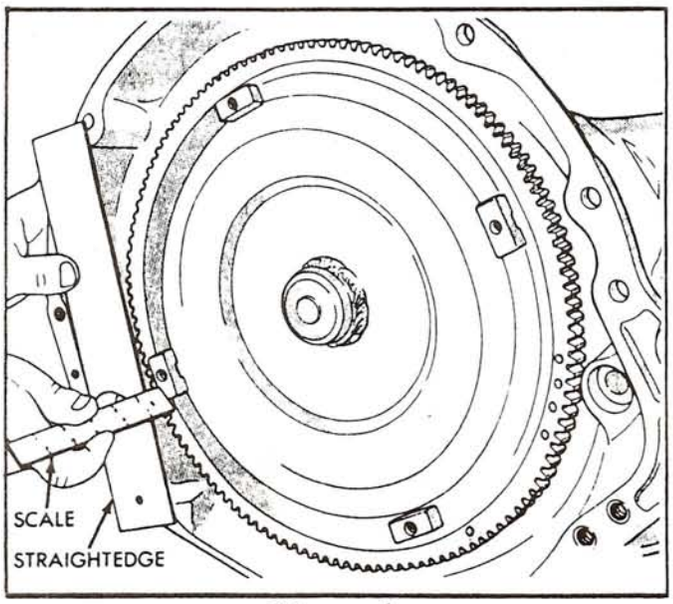

Figure 1

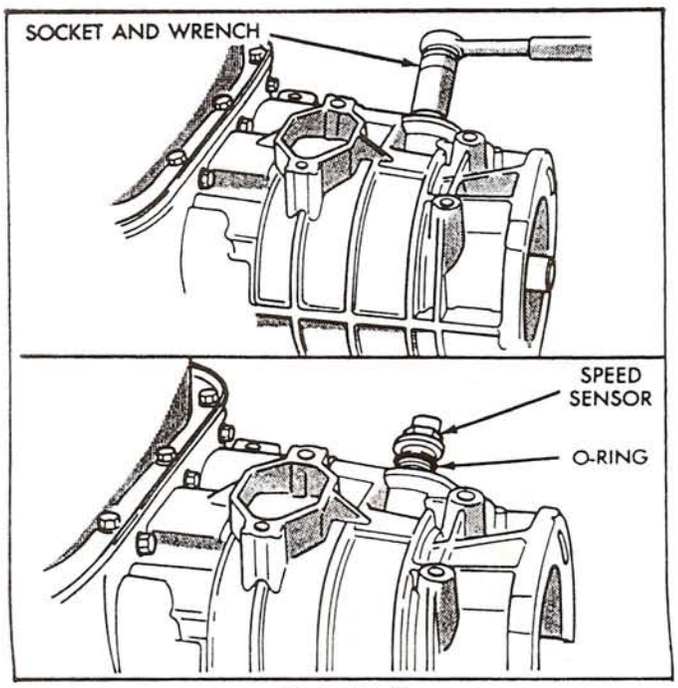

Figure 2

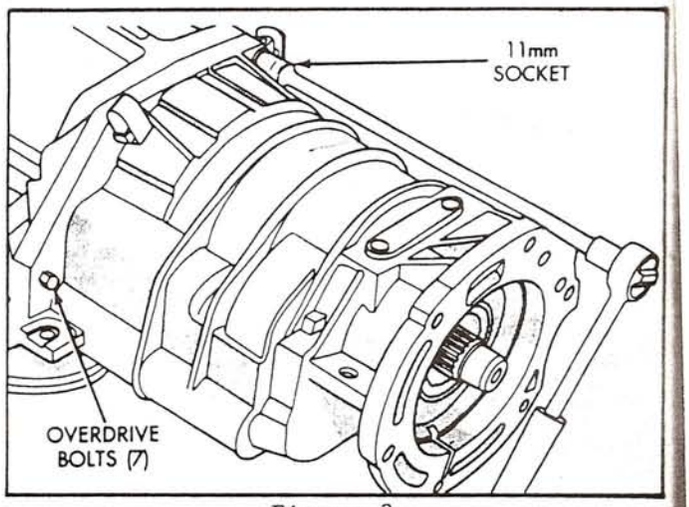

Figure 3

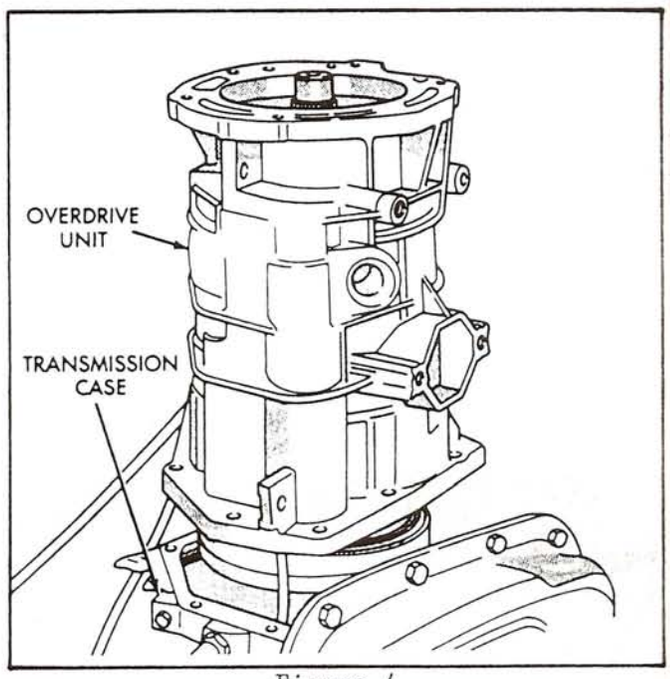

Figure 4

TRANSMISSION DISASSEMBLY

1. Before removing torque converter, surface of converter lugs should be 1/2" to the rear of straight edge when the converter is fully seated. This should be checked for diagnosis purposes (See Figure 1).
2. Remove the torque converter from the transmission.
3. Clean the transmission exterior with steam gun or with solvent before disassembly.
4. Remove shift lever and throttle lever from valve body manual lever shaft.
5. Remove the transmission speed sensor and "O" ring seal from the overdrive unit, as shown in Figure 2.
6. Place transmission in upright position.
7. Remove overdrive unit to case attaching bolts, using an 11mm socket, as shown in Figure 3.
8. Note position of all wiring clips for installation reference.
9. Lift overdrive unit up and off of the transmission intermediate shaft, as shown in Figure 4.

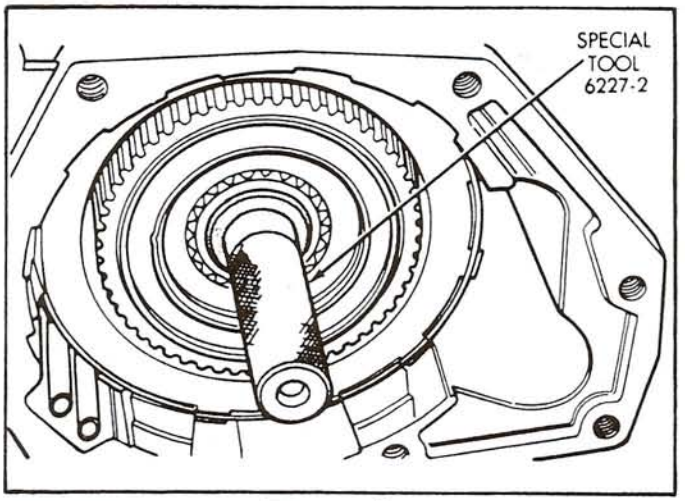

Figure 5

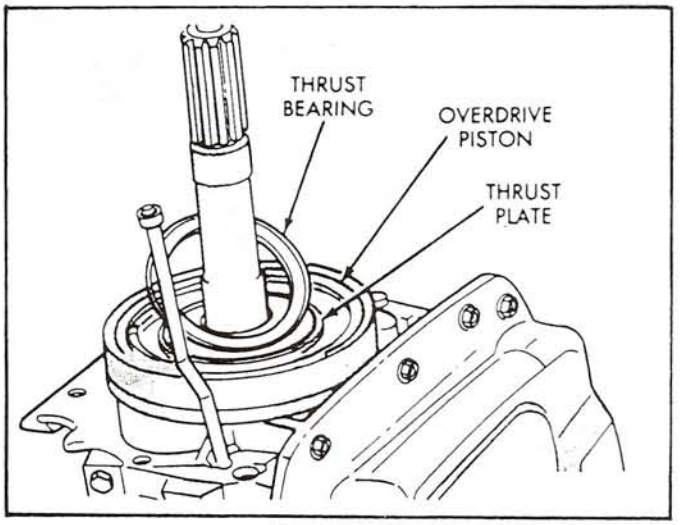

Figure 6

10. If overdrive unit does not require any service, install alignment tool 6227-2 in overrunning clutch and the plantary splines to maintain alignment, shown in Figure 5.
11. Remove the thrust bearing and selective thrust washer from overdrive piston, as shown in Figure 6.
12. Remove the overdrive piston from the retainer, as shown in Figure 7.
13. Place transmission in a horizontal position, with pan facing up.
14. Remove the bottom oil pan and gasket, and discard pan gasket.
15. Remove the oil filter from valve body, as shown in Figure 8.
16. Keep filter screws seperate from other valve body screws, as they are longer and should be kept seperate.

Continued on Page 32.

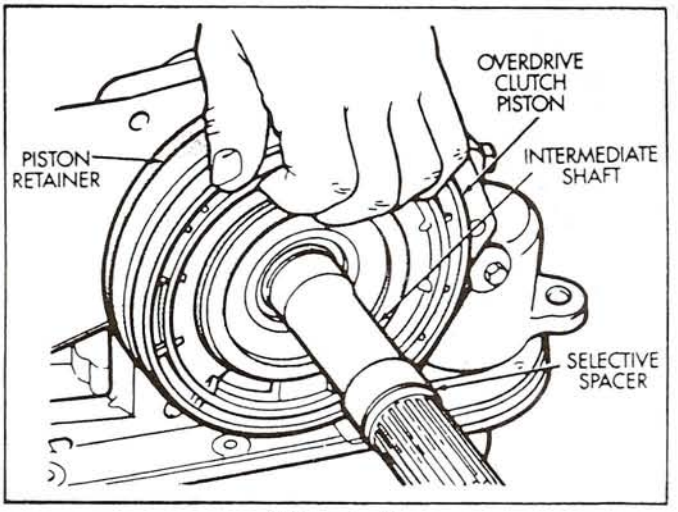

Figure 7

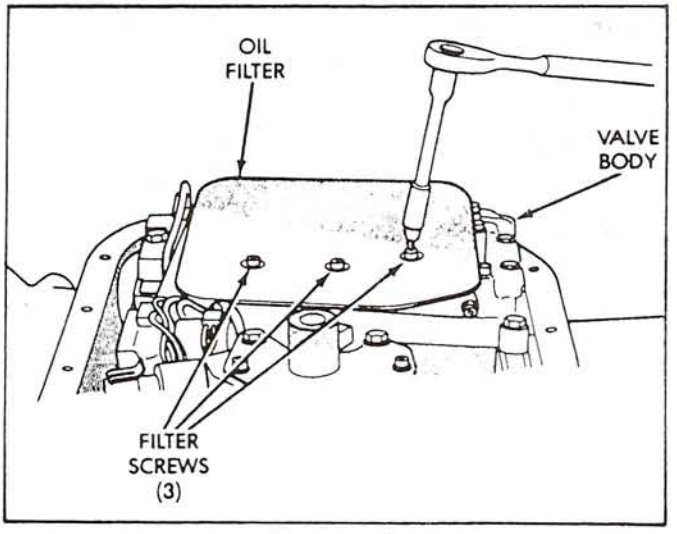

Figure 8

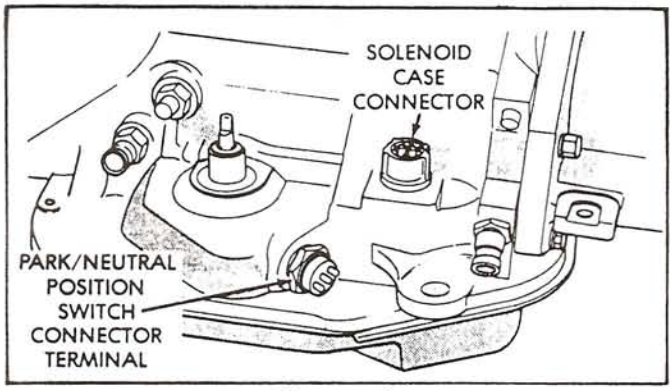

Figure 9

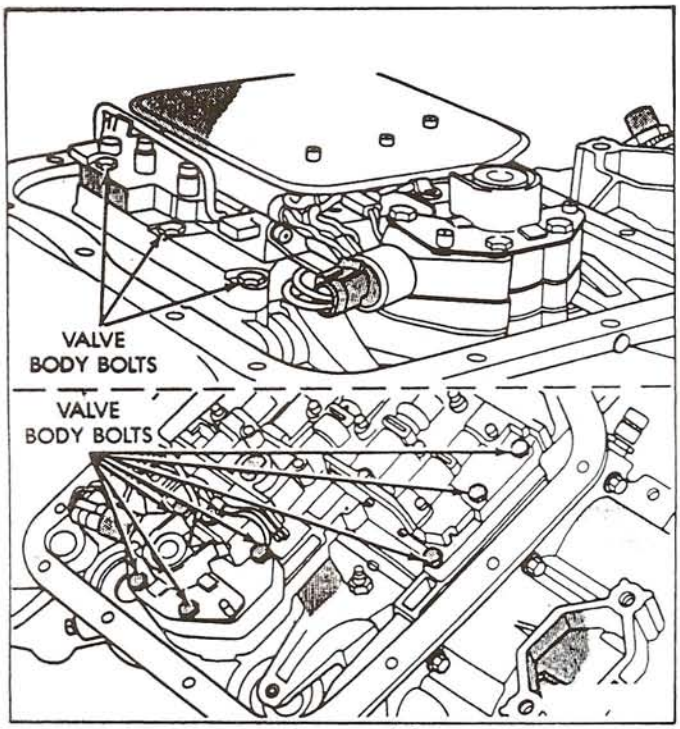

Figure 10

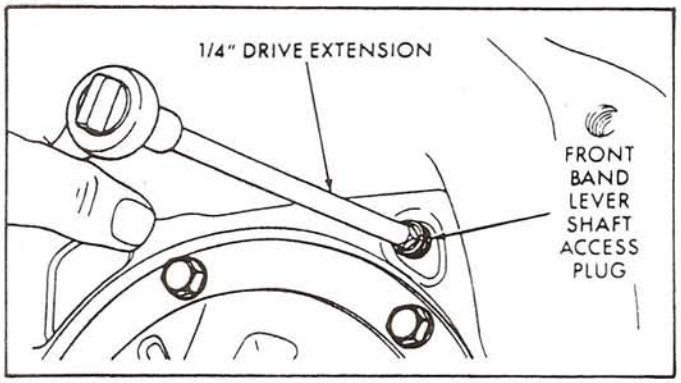

Figure 11

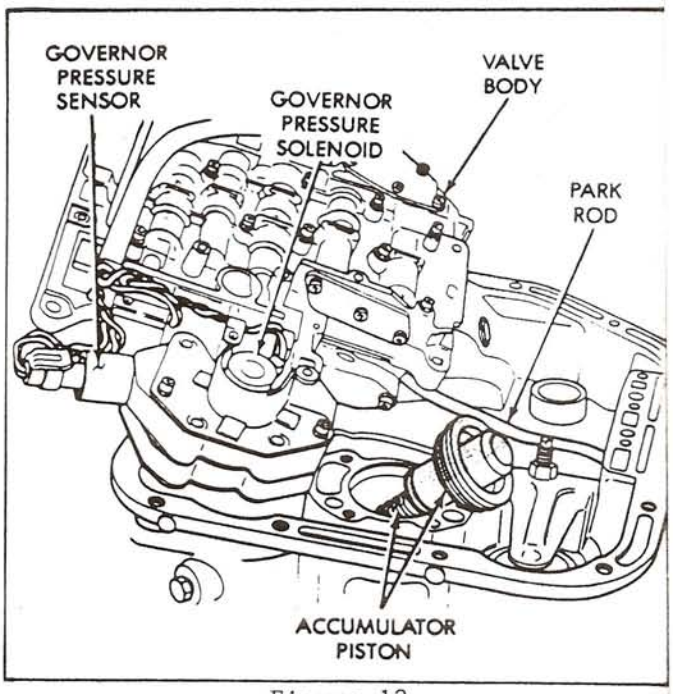

Figure 12

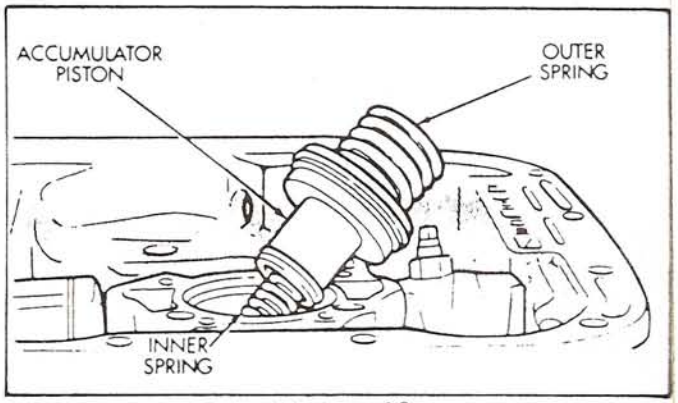

Figure 13

17. Remove the Park/Neutral switch from the case (See Figure 9).
18. Remove ONLY the ten valve body retaining bolts shown in Figure 10. Note the different bolt lengths for reassembly reference.
19. Remove valve body assembly from case by pushing on harness connector, and at same time lifting on valve body. Then work park rod and valve body out of the case (See Figure 12).
20. Excercise care during removal as both governor pressure solenoid and sensor can be damaged by rough handling.
21. Remove the accumulator piston and both inner and outer springs (Figure 13).
22. Remove front band lever shaft access plug through converter housing, shown in Figure 11.

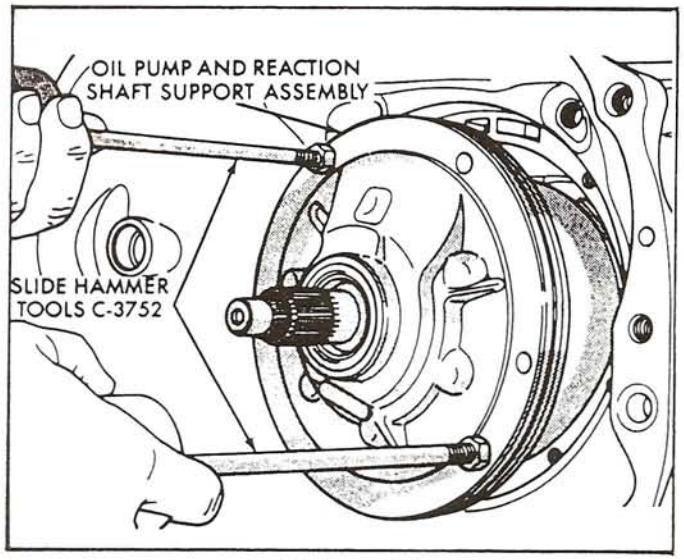

Figure 14

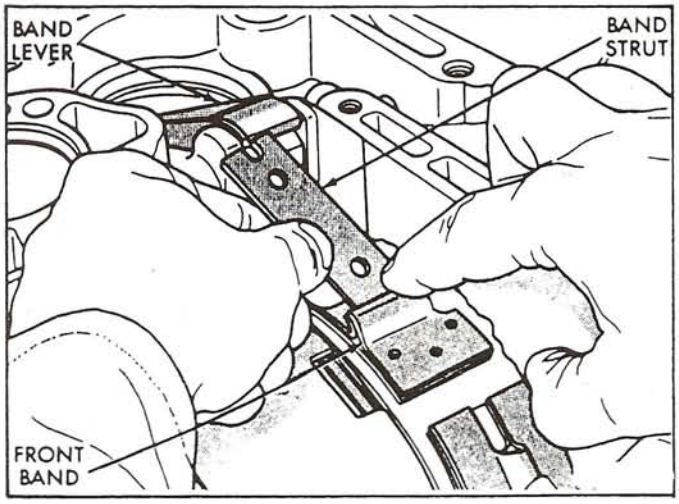

Figure 15

23. Loosen front band locknut, and tighten band adjusting screw all the way in, so the band is tight around drum. This is prevent the drums from coming out with the pump and possible damage.
24. Remove front pump retaining bolts.
25. Remove the front pump assembly using slide hammers, as shown in Figure 14.
26. Remove front band adjusting screw.
27. Squeeze front band together and remove band strut, as shown in Figure 15.
28. Remove front band lever shaft using a pencil magnet (See Figure 16).
29. Remove front band lever, as shown in Figure 17.
30. Remove front and rear clutch drums as an assembly, by lifting straight up on the turbine shaft, and remove them from the case (See Figure 18).

Continued on Page 34.

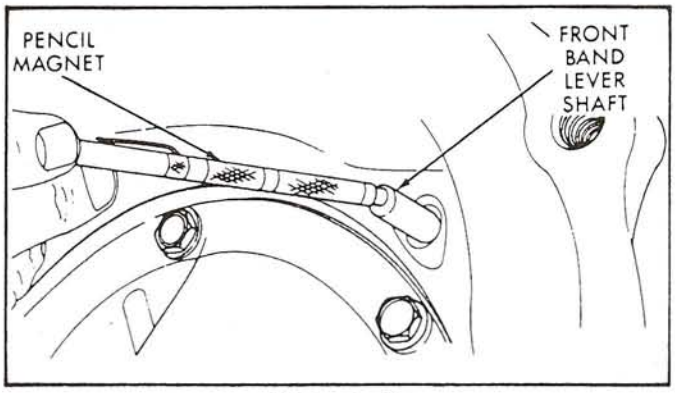

Figure 16

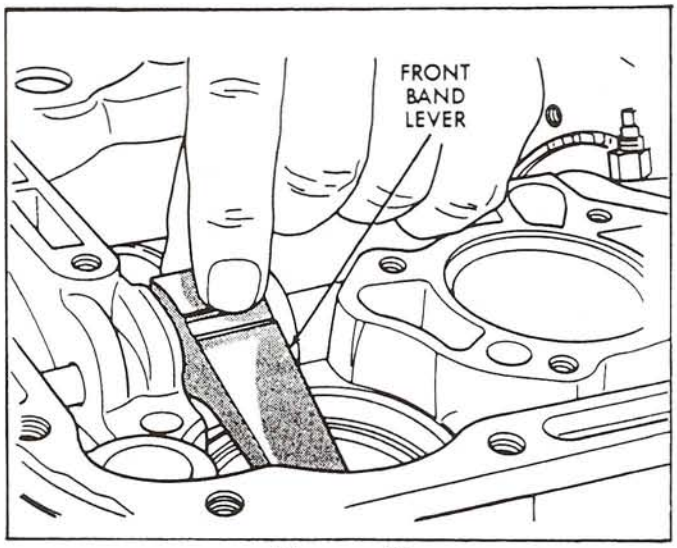

Figure 17

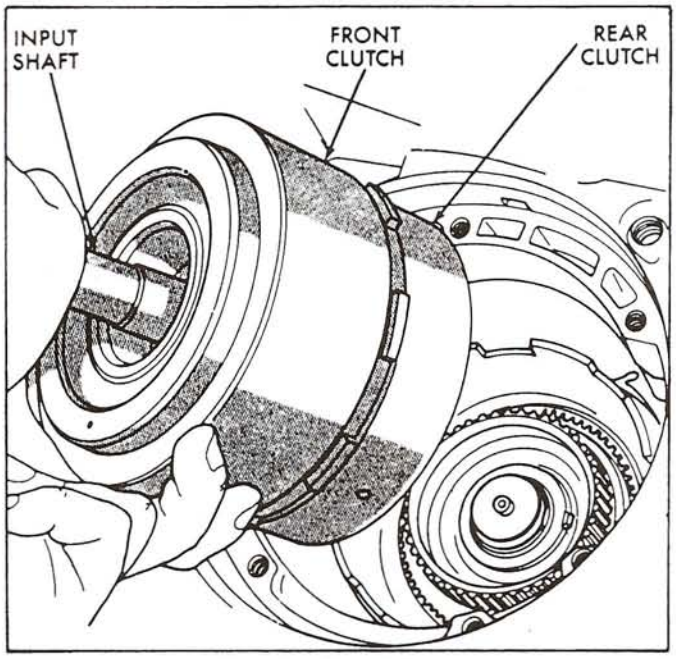

Figure 18

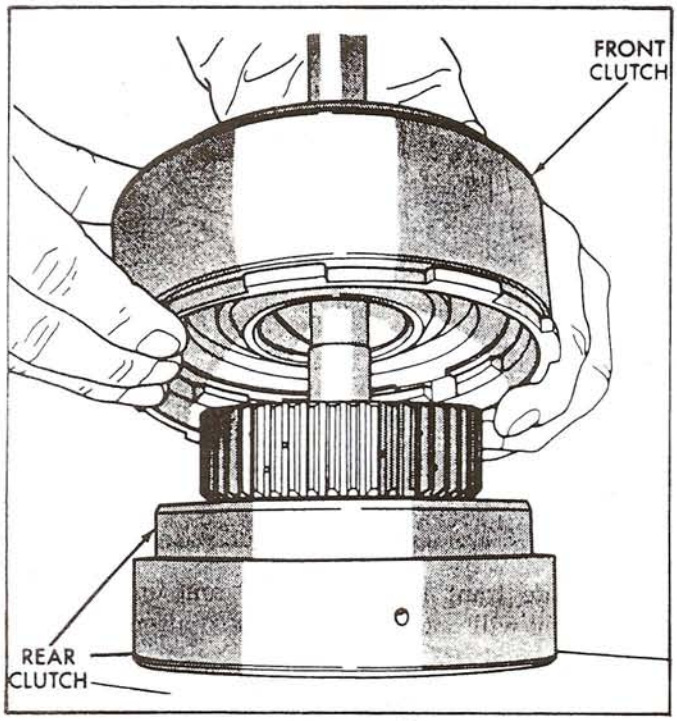

Figure 19

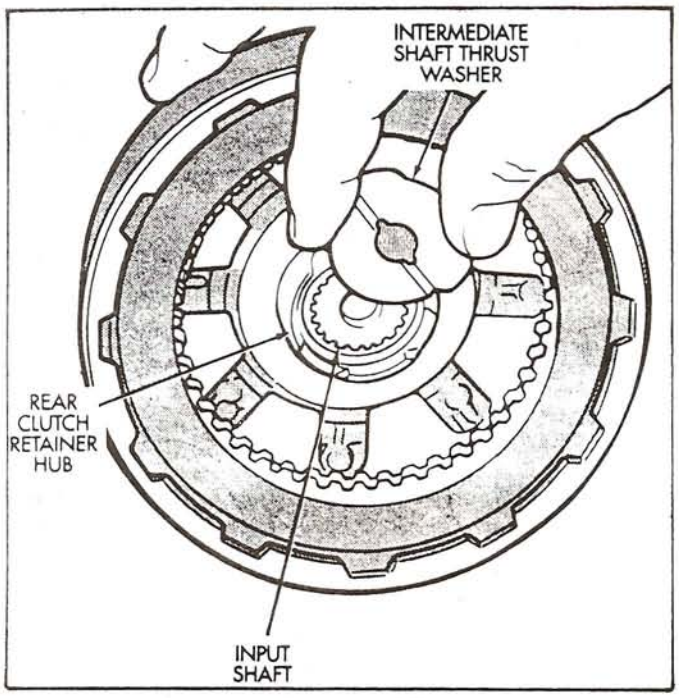

Figure 20

31. Seperate front and rear clutch drums, as shown in Figure 19, and set both of the drums aside for overhaul during subassembly.

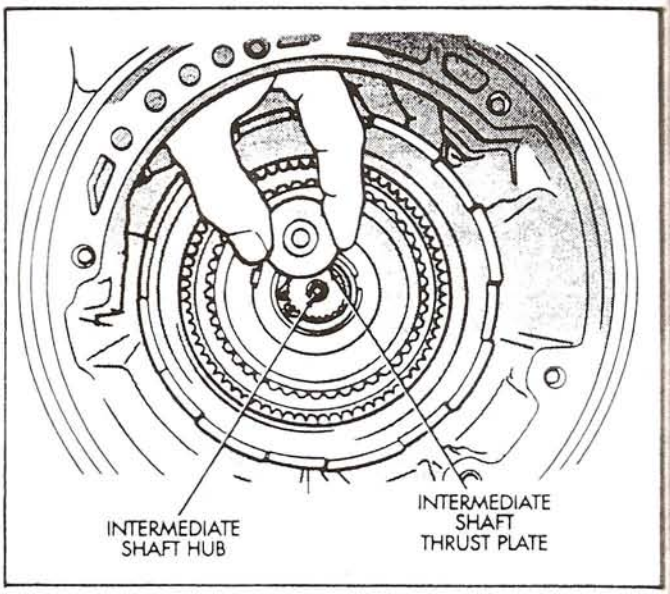

Figure 21

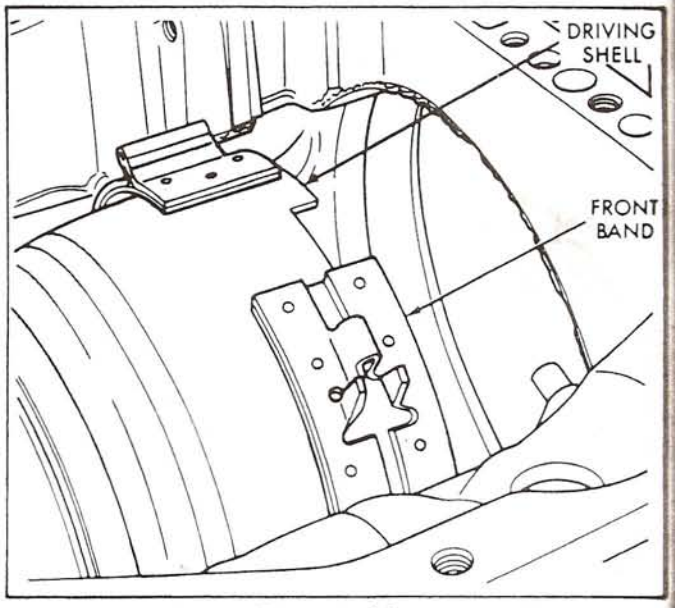

Figure 22

32. Remove intermediate shaft thrust washer from front end of shaft, or from rear clutch drum (See Figure 20).
33. Remove intermediate shaft thrust plate from the intermediate shaft hub, shown in Figure 21.
34. Slide the front band off of the driving shell (See Figure 22), and remove from the case.

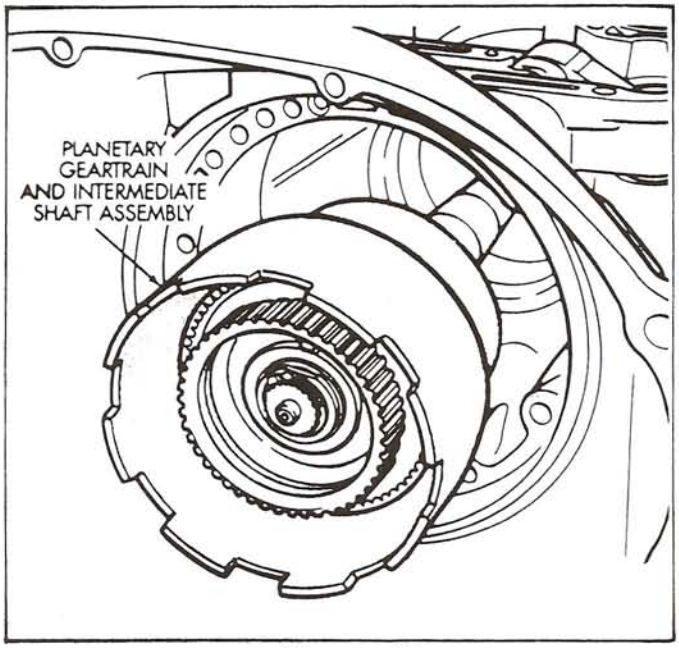

Figure 23

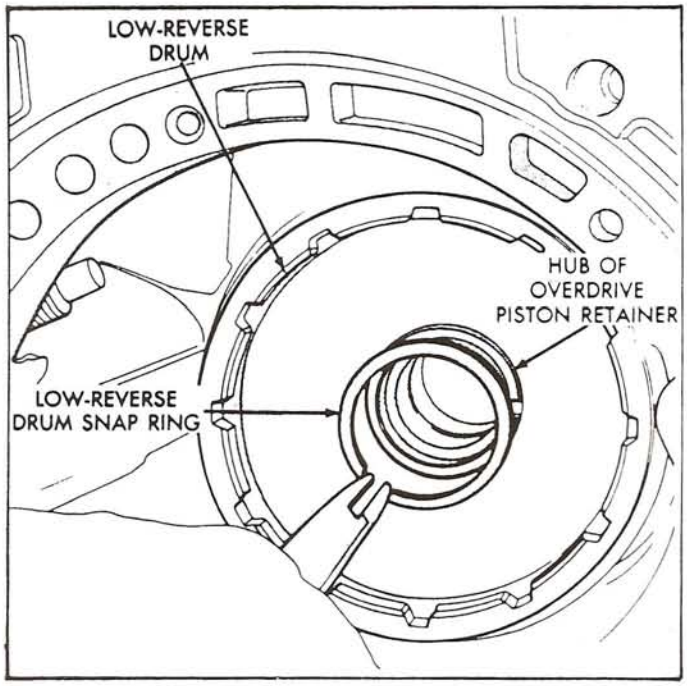

Figure 24

35. Remove the planetary gear train as an assembly as shown in Figure 23. Support the geartrain with both hands as you remove it, to ensure there is no damage done to the overdrive piston retainer.
36. Loosen the rear band adjusting screw 5 or 6 full turns.
37. Remove the low/reverse drum snap ring using snap ring pliers, as shown in Figure 24.

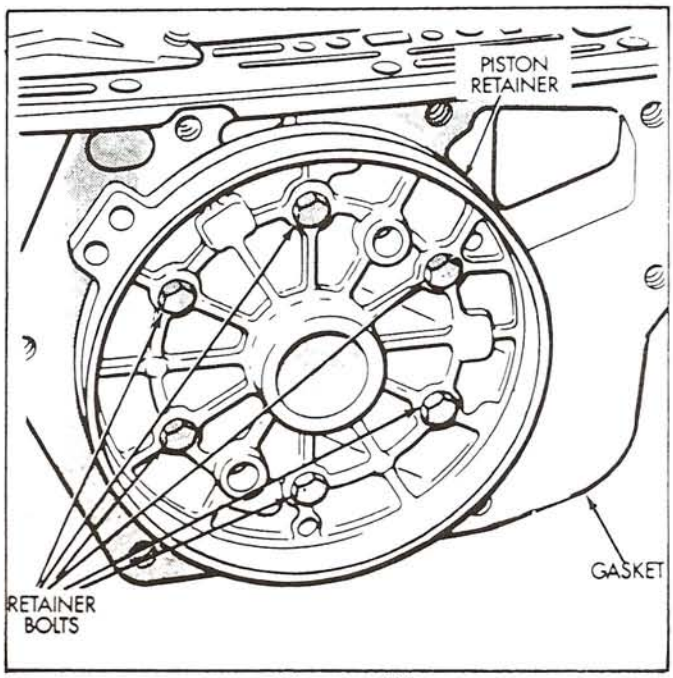

Figure 25

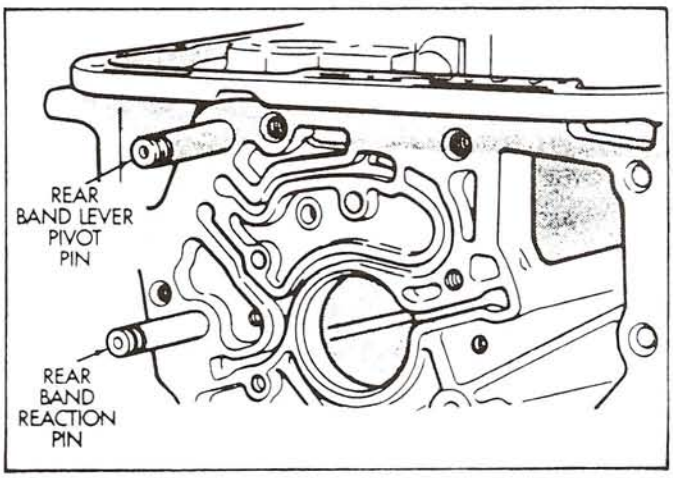

Figure 26

38. Remove the bolts attaching overdrive piston retainer to rear of case, as shown in Figure 25.
39. Remove the overdrive piston retainer from the case, remove and discard the retainer to case gasket.
40. Remove the rear band pivot and reaction pins, as shown in Figure 26. Insert and spread snap ring pliers in the pin bore, then twist and pull pins as you remove them from case.
41. Remove the rear band lever from case.

Continued on Page 36.

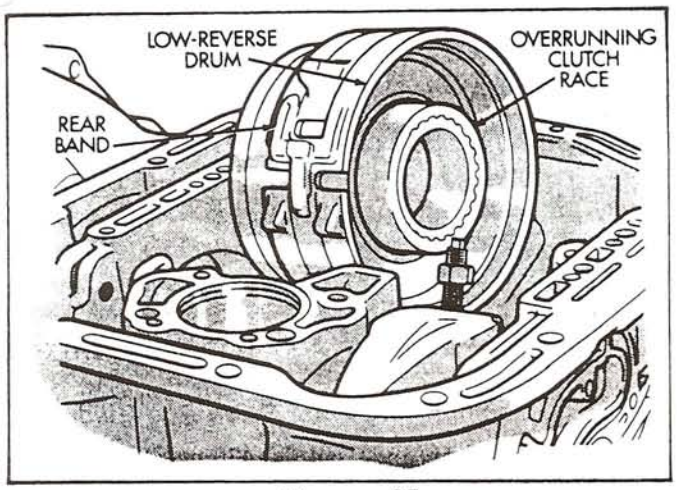

Figure 27

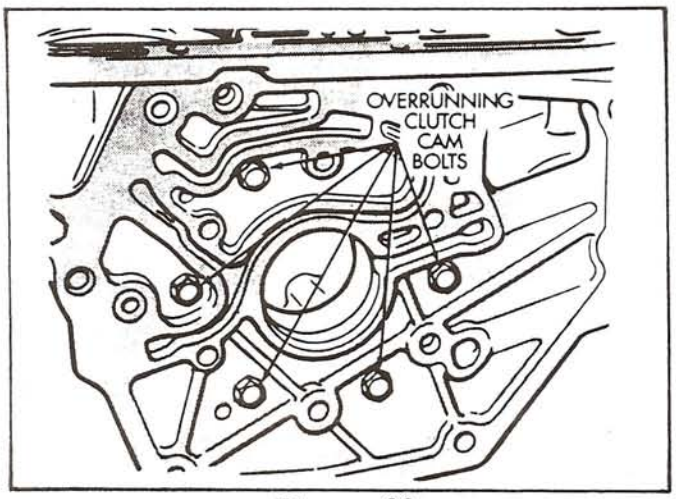

Figure 28

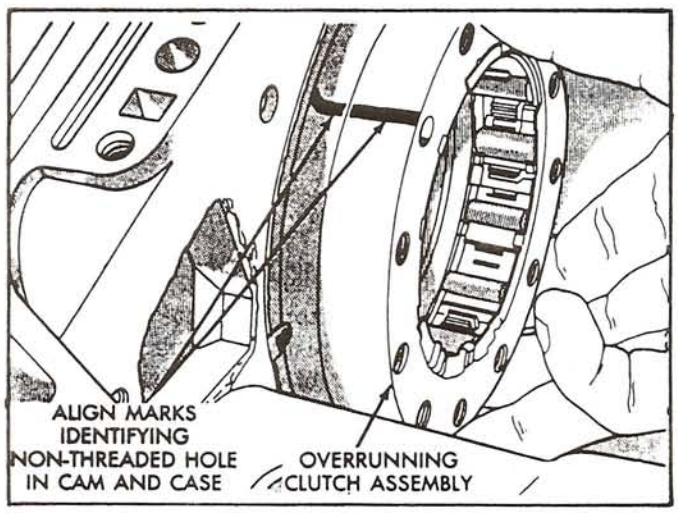

Figure 29

42. Remove the low/reverse drum and rear band as an assembly, as shown in Figure 27. Turn drum clockwise and pull out to remove it from overrunning clutch.
43. Remove the bolts attaching overrunning clutch cam to case, as shown Figure 28.
44. Check the overrunning clutch cam for "Align Marks" on the cam and case, as shown in Figure 29. These marks are to identify the Non-threaded hole in the overrunning clutch cam.
45. If there are no paint marks to identify the non-threaded hole, put some there for reassembly purposes, before removal. Refer to Figure 29.
46. Remove overrunning clutch cam and the roller clutch assembly as a unit. Turn cam back and forth and tilt it inward to remove it from case (Figure 29).
47. Compress front servo rod guide about 1/8" with compressor, as shown in Figure 30, and remove snap ring.
48. Exercise caution when removing snap ring as servo bore can be damaged.
49. Remove compressor tools and remove the front servo parts.
50. Compress the rear servo spring retainer about 1/16" with spring compressor, as shown in Figure 31, and remove the snap ring.
51. Remove the compressor tools and remove rear servo piston and spring.
52. Clean and inspect all transmission and component parts.

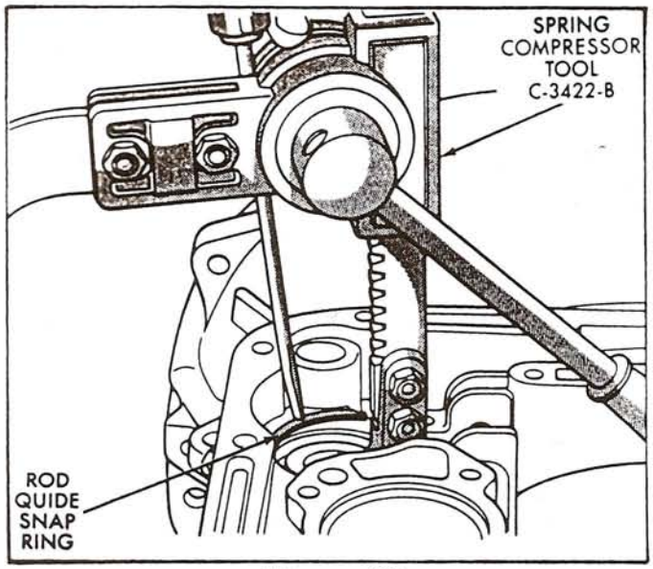

Figure 30

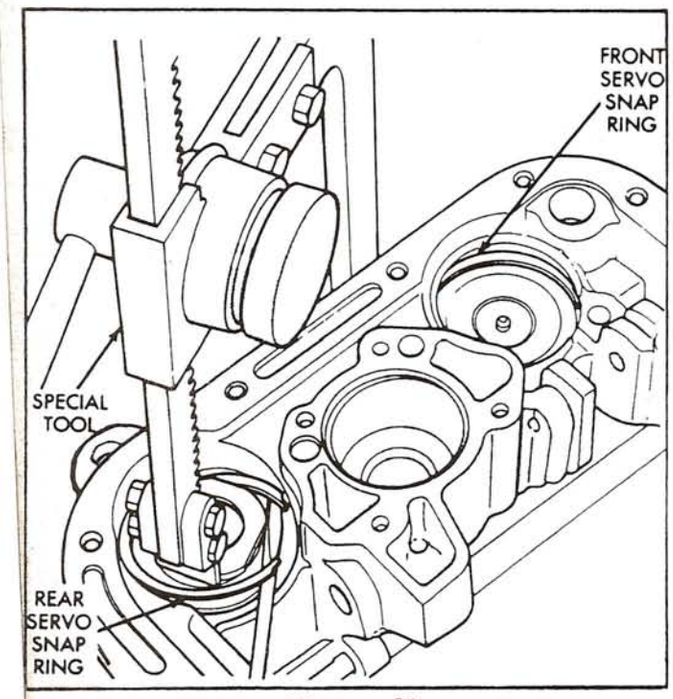

Figure 31

OVERHAUL SERVICE INFORMATION

Inspect the transmission bushings during overhaul. Bushing condition is important as worn or scored bushings contribute to low pressures, clutch slippage and wear of related parts. Replace bushings only when they are actually worn or scored.

Use recommended tools to replace bushings as they are designed to remove and install bushings correctly.

Pre-sized service bushings are available for replacement purposes. Only the sun gear bushings are not serviced. The sun gear is replaced as an assembly if the bushings are damaged.

Heli-Coil inserts can be used to repair damaged, stripped or worn threads in any aluminum parts. These inserts are available from most automotive jobbers. The stainless steel inserts are recommended.

The use of crocus cloth is permissible if it is used carefully. When used on shafts, or valves, use extreme care to avoid rounding off sharp edges. Sharp edges are vital as they prevent foreign material from getting between the valve and valve bore.

Do not reuse oil seals, gaskets, "O" ring, seal rings or filter during overhaul. These are mandatory replacement parts. Also don't reuse snap rings or "E-Clips" that are bent or distorted. Replace these parts as well.

Lubricate transmission parts with Dexron or 7176 transmission fluid during assembly. Use Trans-Jel to prelubricate seals, "O" rings, and thrust washers. Trans-Jel can also be used to hold parts in place during the reassembly process.

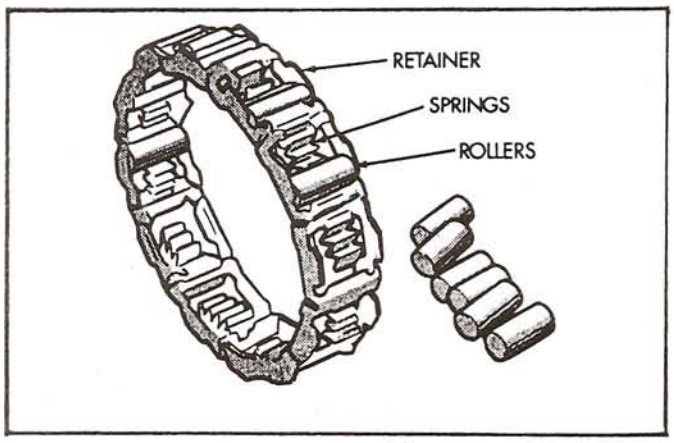

Figure 32

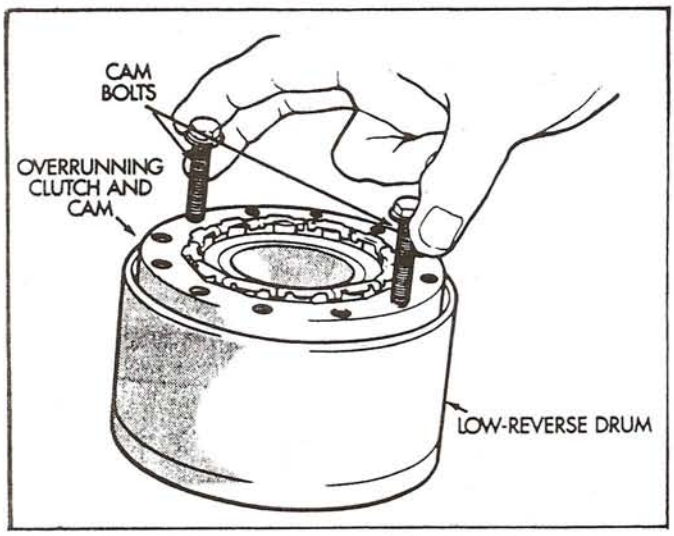

Figure 33

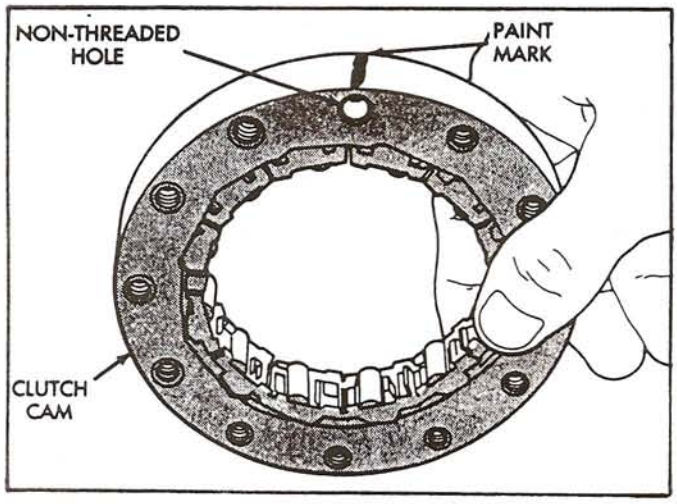

Figure 34

TRANSMISSION SUB-ASSEMBLY

TRANSMISSION CASE

1. Clean the transmission case in solvent tank with clean solvent. Flush all of the bores and passages thoroughly, and dry with compressed air.
2. Inspect the case carefully for cracks, porous spots, worn bores, or damaged threads.
3. Damaged threads can be repaired with Heli-Coil thread inserts.
4. Lubricate the front band adjusting screw threads with a small amount of the Trans-Jel, and thread the screw part way into the case. Be sure the screw turns freely.
5. Clean the overrun clutch parts with clean solvent, and dry with compressed air.
6. Inspect all parts for damage.
7. Install the rollers into overrun clutch cage, as shown in Figure 32.
8. If the overrunning clutch and cam came out with the low/reverse drum, thread two cam bolts into the cam, as shown in Figure 33.
9. Lift the clutch and cam out of the drum with the bolts (See Figure 33). Rotate the cam if necessary to ease removal.
10. Examine the bolt holes in the overrun clutch cam. Note that one hole is not threaded (See Figure 34).
11. This hole MUST align with blank area, marked with an "X" as shown in Figure 35.
12. This hole should have been marked with paint before disassembly, as shown in Figure 34, with a coresponding mark on the case.
13. Notice also that the overrun clutch cam threaded holes are slightly countersunk on one side (See Figure 34).
14. Be sure this side of the cam faces the rear of the transmission case.
15. Install the overrunning clutch in the overrun clutch cam.
16. Align and install overrunning clutch and cam into transmission case (See Figure 36.
17. Verify that non-threaded hole in clutch cam is properly aligned, by threading a bolt into each hole. Adjust clutch cam position as necessary.

18. Install the five overrunning clutch cam bolts in the positions shown in Figure 37.
19. Verify that your marks are aligned as shown in Figure 36.
20. Torque the five overrun clutch bolts to 13 ft.lbs. (See Figure 37). Note that the cam bolts are shorter than the piston retainer bolts.
21. Lubricate the overrun clutch rollers with transmission fluid.

Continued on Page 40.

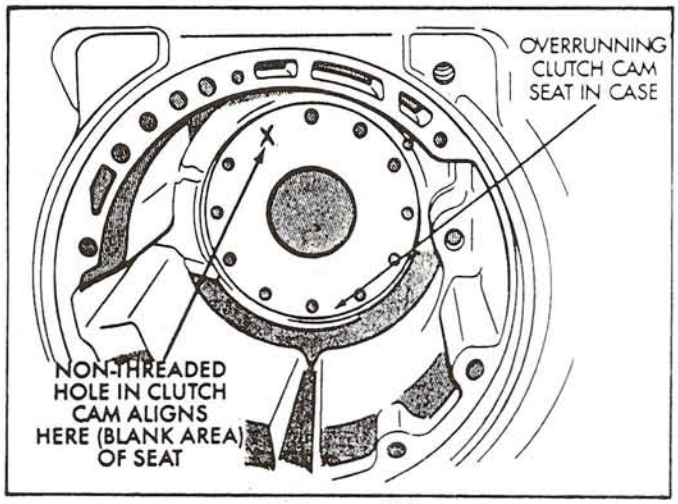

Figure 35

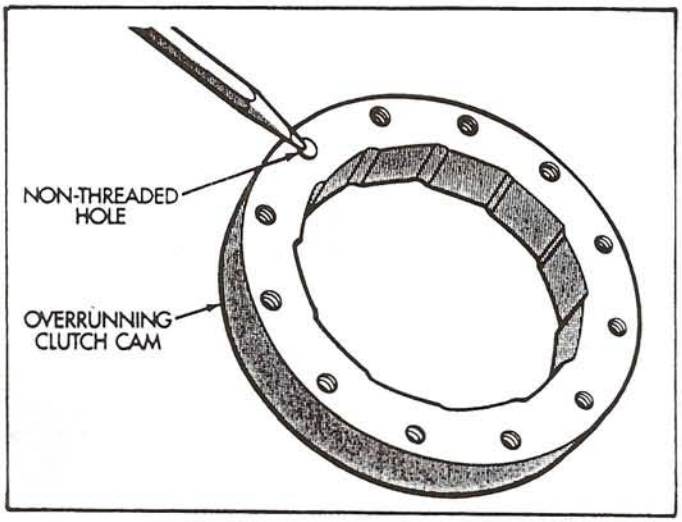

Figure 35A

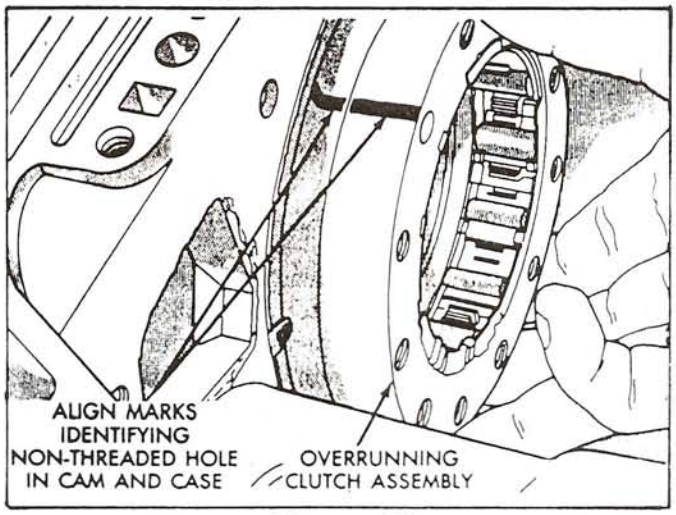

Figure 36

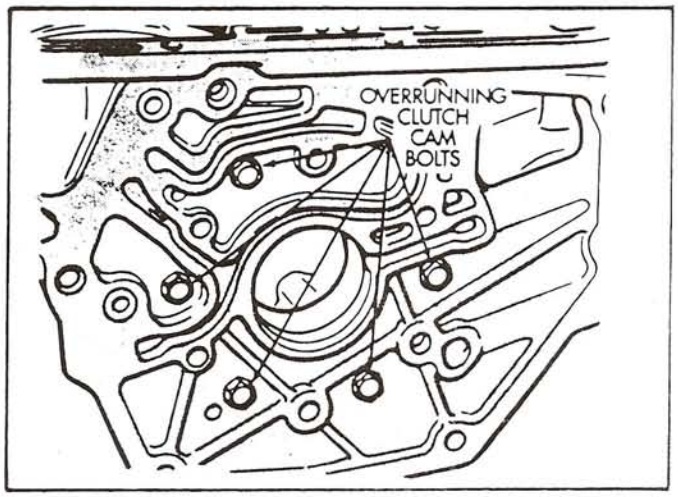

Figure 37

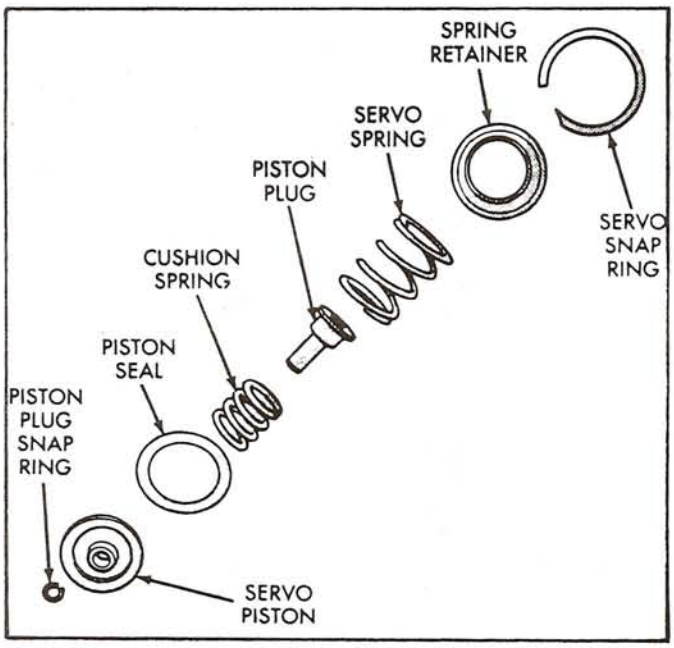

Figure 38

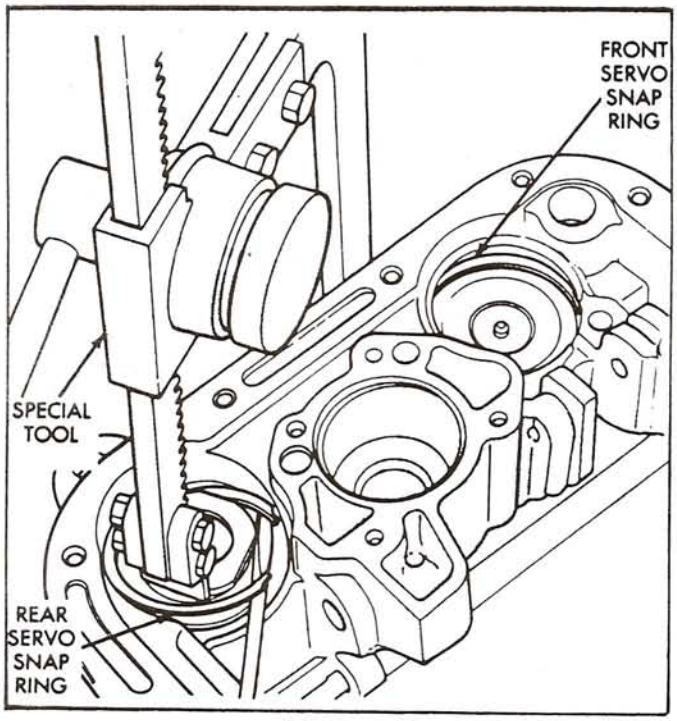

Figure 39

22. Assemble reverse servo piston plug, the cushion spring and piston, as shown in Figure 38. Lubricate with fluid.
23. Compress cushion spring in vise, and install the snap ring on piston plug, as shown in Figure 40.
24. Install new lip seal on piston, with the lip facing away from cushion spring as shown in Figure 41.

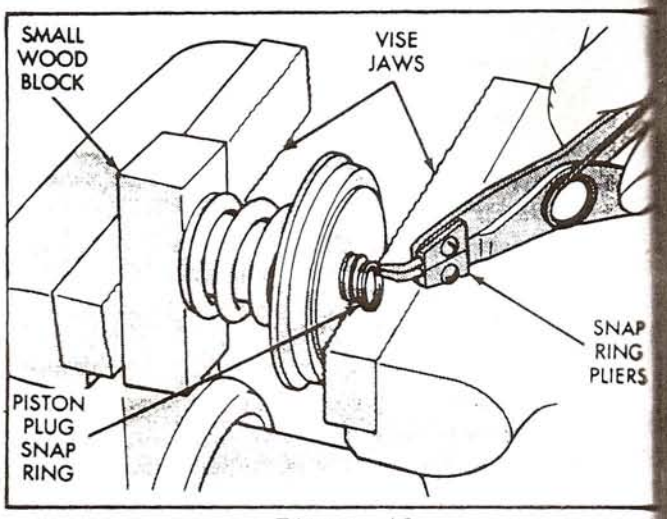

Figure 40

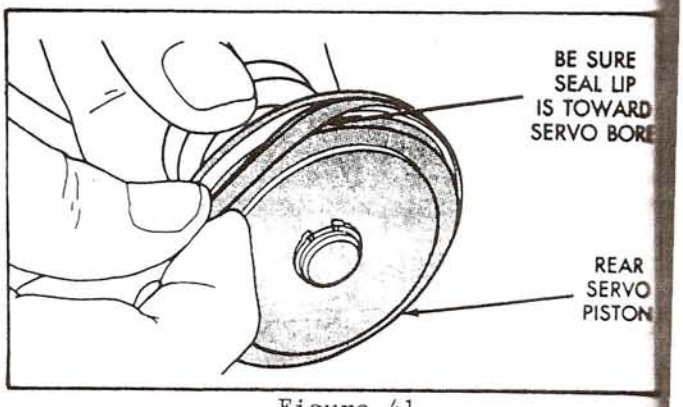

Figure 41

25. Lubricate the reverse servo piston and seal with liberal amount of Trans-Jel.
26. Lubricate the reverse servo bore in the case, with a liberal amount of the Trans-Jel.
27. This is done to prevent this piston from cocking and sticking in the bore of the case.
28. Install the reverse servo piston assembly into the case.
29. Install the reverse servo return spring and retainer on top of the piston.
30. Install spring compressor, compress the spring, and install snap ring, as shown in Figure 39.
31. Remove the compressor tools.

32. Install new seal rings (2), on front servo piston and lubricate with small amount of Trans-Jel (See Figure 42).
33. Install new "O" ring seal on the servo piston rod, and lubricate with small amount of Trans-Jel (See Figure 42).
34. Install servo piston rod into the front servo piston and install snap ring, as shown in Figure 42.
35. Lubricate the front servo case bore with a small amount of Trans-Jel.
36. Install the front servo piston assembly into the case bore.
37. Install the servo piston return spring on top of the front servo piston.
38. Install new "O" ring on piston rod guide and lubricate with small amount of Trans-Jel.
39. Install piston rod guide, compress the assembly with compressor tool, shown in Figure 43.
40. Install snap ring on top of piston rod guide, as shown in Figure 43.
41. Remove the compressor tools.
42. Set the transmission case assembly aside for final assembly.

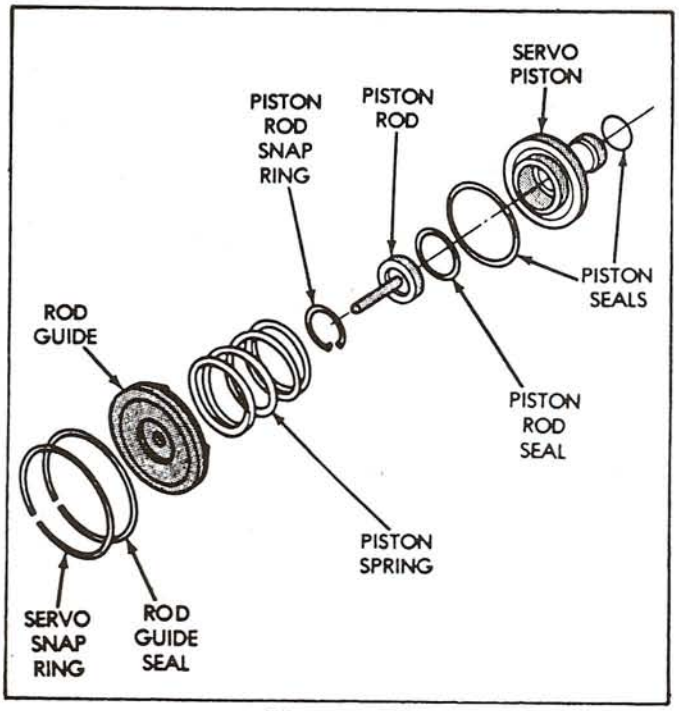

Figure 42

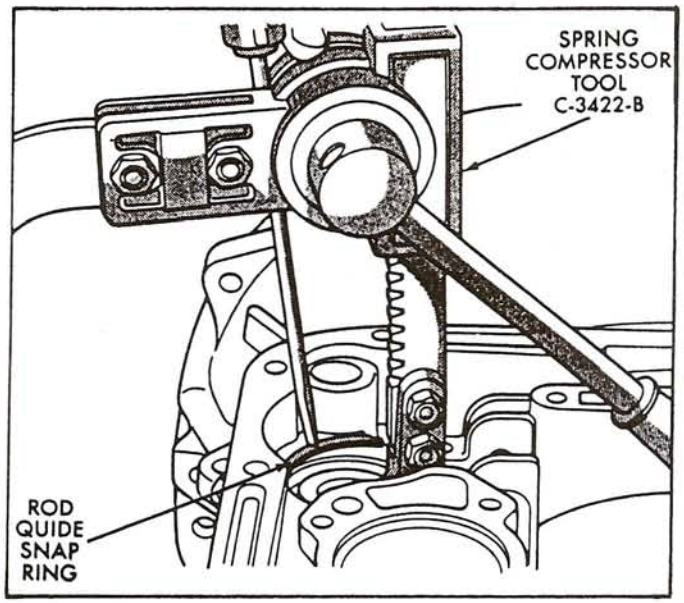

Figure 43

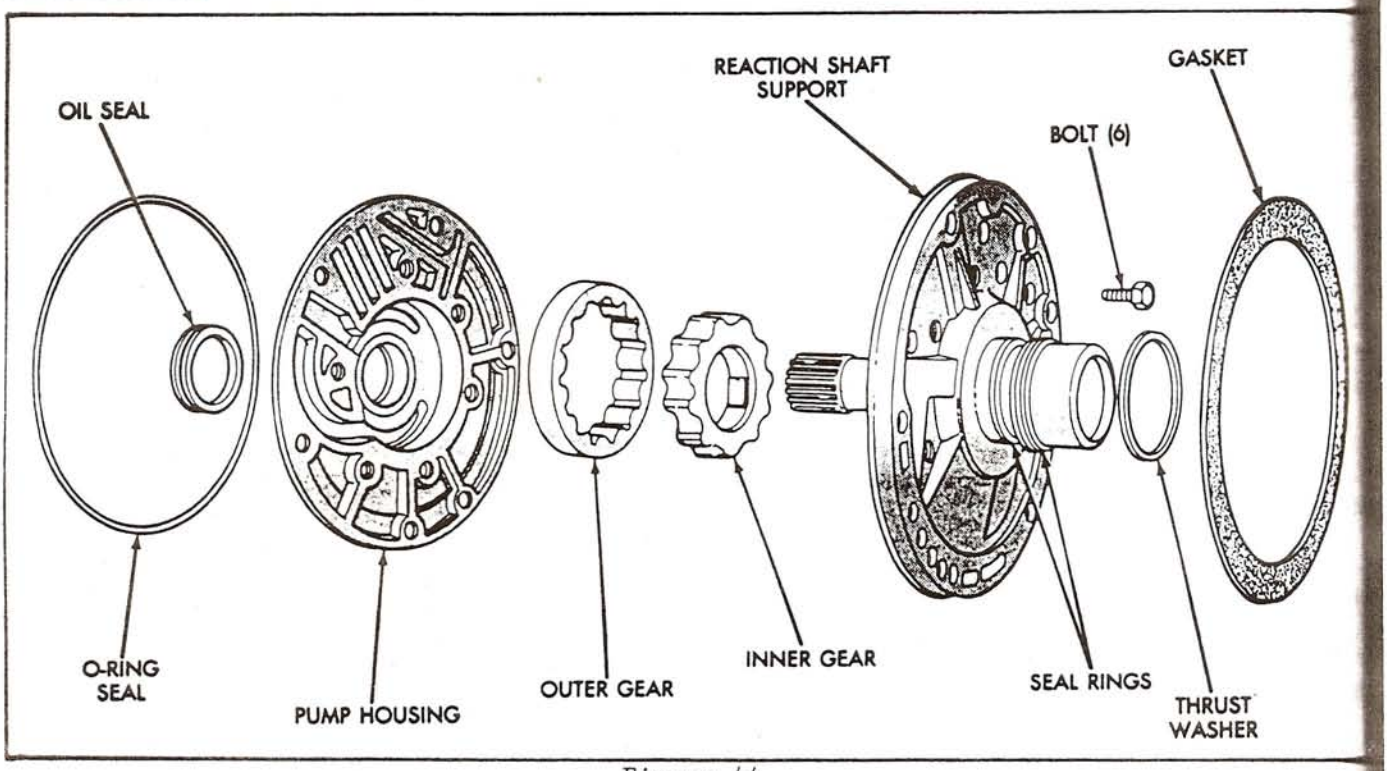

Figure 44

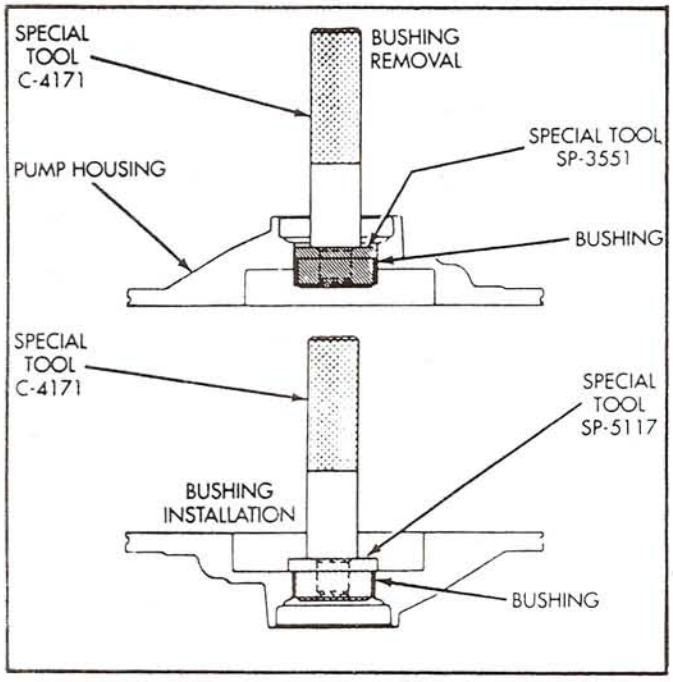

Figure 45

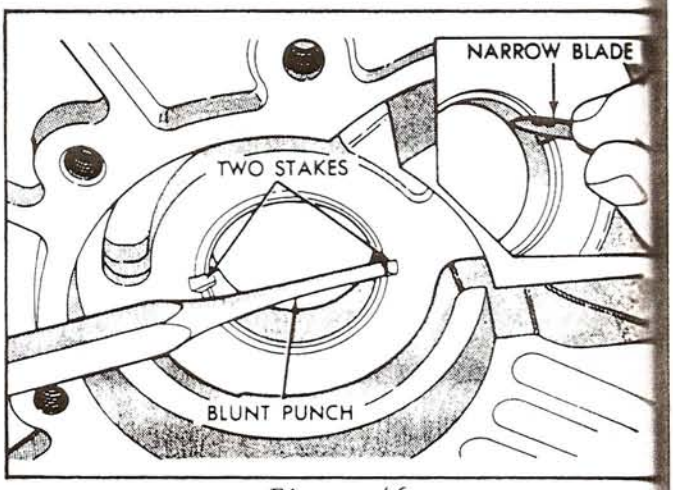

Figure 46

OIL PUMP AND REACTION SHAFT SUPPORT

1. Clean and inspect all oil pump parts and components (See Figure 44).
2. Remove the pump body bushing using the driver shown in Figure 45, driving the bushing out towards the pump pocket.
3. Install the new pump body bushing from the pump pocket side, as shown in Figure 45.
4. Bushing should be flush with the pump housing bore.
5. Stake the new pump bushing in 2 places with a blunt punch, as shown in Figure 46, and remove burrs from stake points with a small knife blade (Figure 46).
6. Install both pump gears into the pump housing and measure clearance with a feeler gauge and straight edge, as shown in Figure 48. Clearance should be .0015"-.0035".

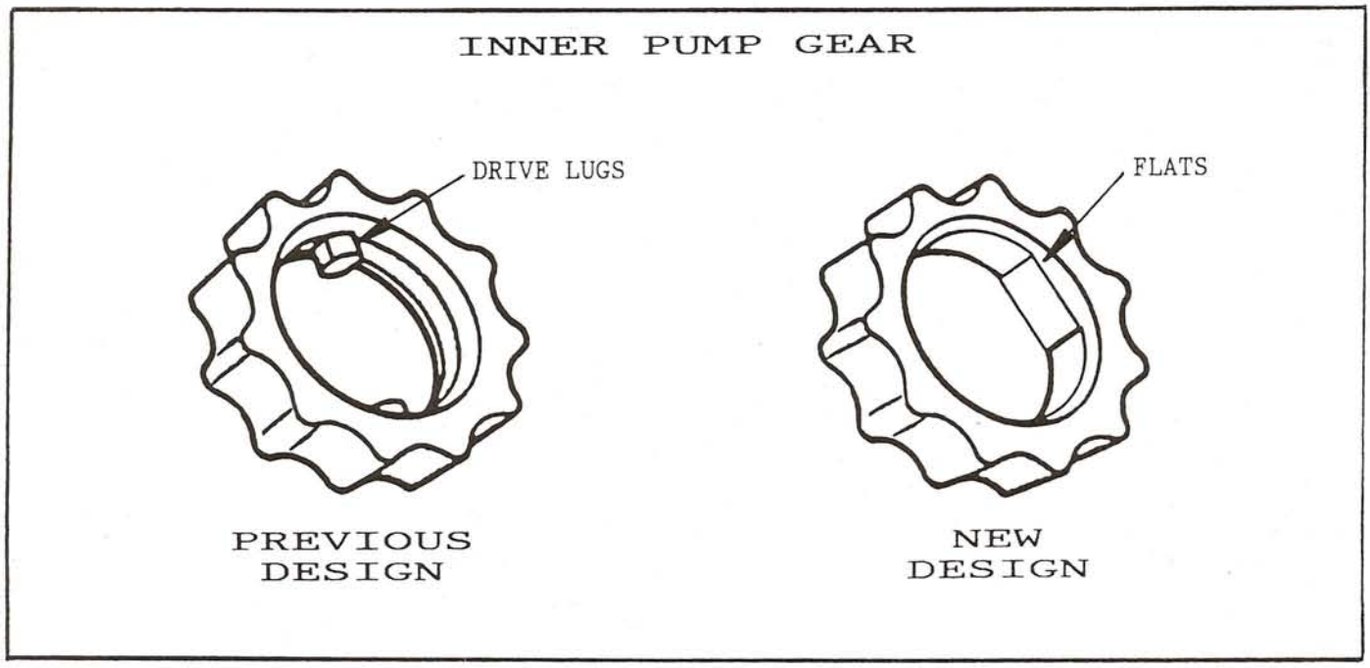

Figure 47

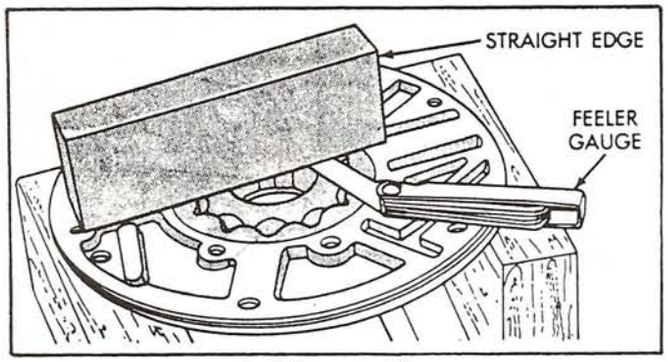

Figure 48

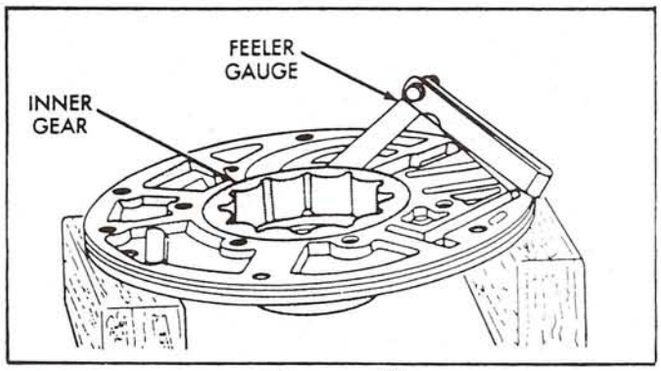

Figure 49

7. Measure clearance between the outer gear and the pump body, as shown in Figure 49, with a feeler gauge. The clearance should be .0035"-.007".
8. Note that the inner gear used in the 42RE oil pumps has a new design drive lug. The new design uses "Flats", as opposed to the previously used square lug (See Figure 47).
9. If it is necessary to replace reaction shaft support bushing, refer to Figure 50 for the special tools required.

Continued on Page 44.

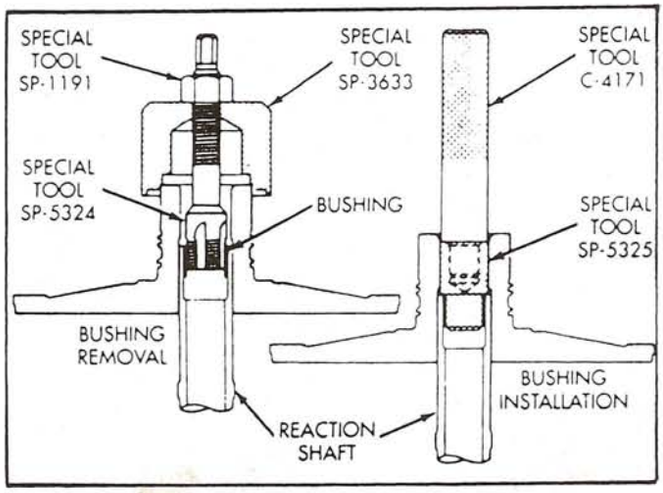

Figure 50

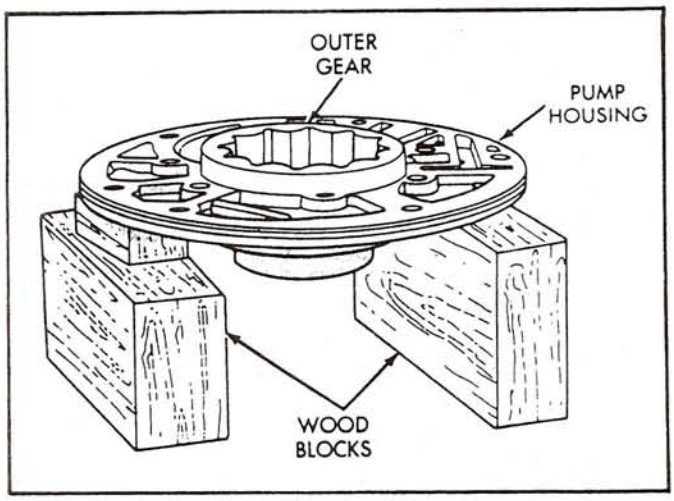

Figure 51

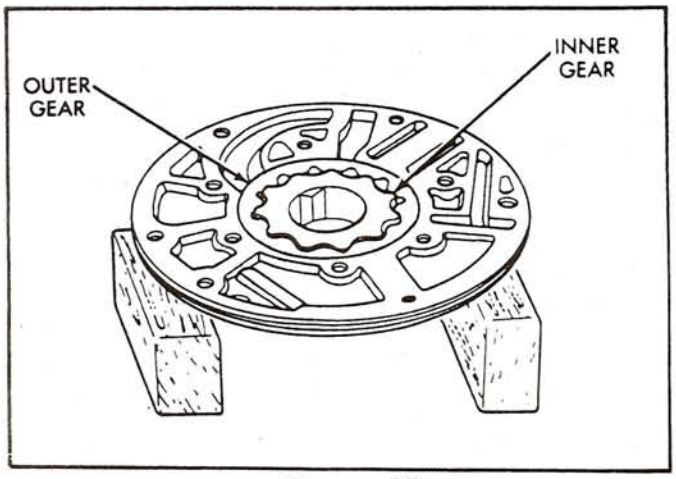

Figure 52

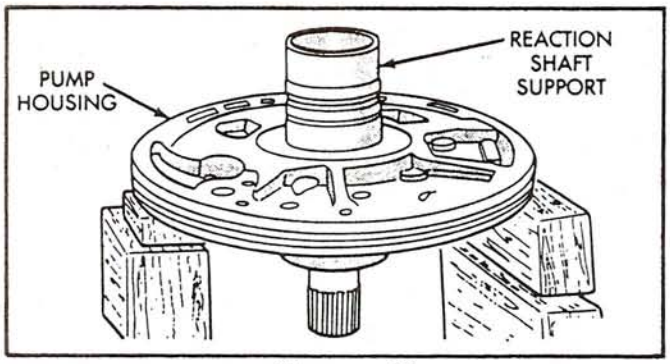

Figure 53

10. Lubricate the pump pocket in the pump body with transmission fluid.
11. Lubricate both inner and outer pump gears with transmission fluid.
12. Support the pump body on wooden blocks as shown in Figure 51.
13. Install the outer pump gear into pump pocket (See Figure 51). The outer gear can be installed either side up.
14. Install the inner pump gear into pump pocket (See Figure 52).
    CAUTION: The inner pump gear is a one way fit. The bore on one side of the gears inside diameter is chamfered. Be sure the chamfered side faces down, or towards the bushing.
15. Install thrust washer on the reaction shaft support, and retain with a small amount of Trans-Jel.
    CAUTION: The thrust washer is one-way fit. The washer inside diameter is chamfered on one side. Be sure washer is installed with the chamfered side facing towards pump cover.
16. Install the reaction shaft support on the pump body as shown in Figure 53.
17. Align or rotate reaction support until bolt holes in support and pump housing are all aligned. It only fits one way.
18. Install all six bolts that attach the support to pump body "Finger Tight".
19. Install the pump assembly into case bore in the reversed position so that bolts are facing out and accessible. This will align the pump halves.
20. Secure the pump assembly in case with 2 or 3 bolts, or with pilot studs.
21. Torque the six bolts that attach the support to pump body to 15 ft.lbs, as shown in Figure 54.
22. Remove the oil pump assembly from the transmission case.
23. Install new front seal into pump body using seal driver, as shown in Figure 55.
24. Install 2 new sealing rins onto pump reaction shaft support. Squeeze each ring until ring ends are securely hooked together (See Figure 56).
25. Install new seal ring around pump body as shown in Figure 57. Ensure that seal is properly seated in groove, and not twisted.
26. Lubricate seal ring, 2 metal sealing rings, and front seal lip with small amount of Trans-Jel.

27. Lubricate splines on reaction shaft with a small amount of Trans-Jel to help on converter installation.
28. Ensure that front pump gears rotate freely in oil pump.
29. Set oil pump assembly aside for final assembly.

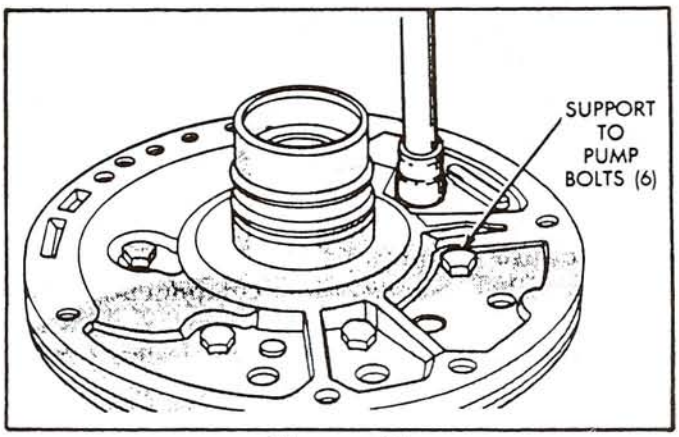

Figure 54

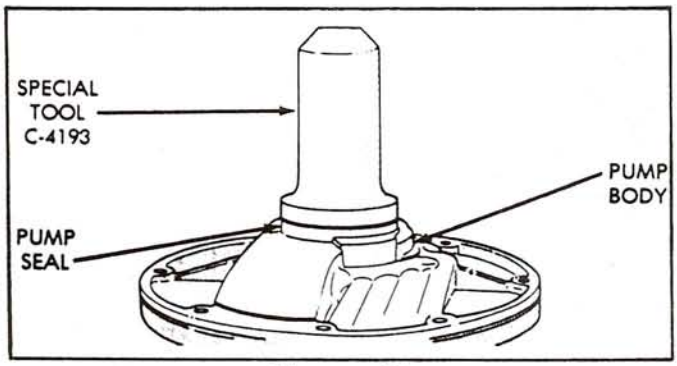

Figure 55

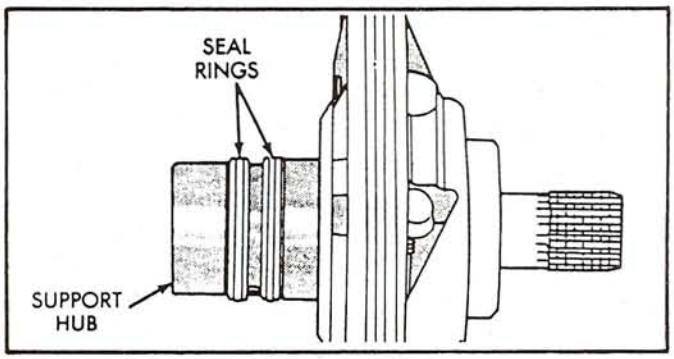

Figure 56

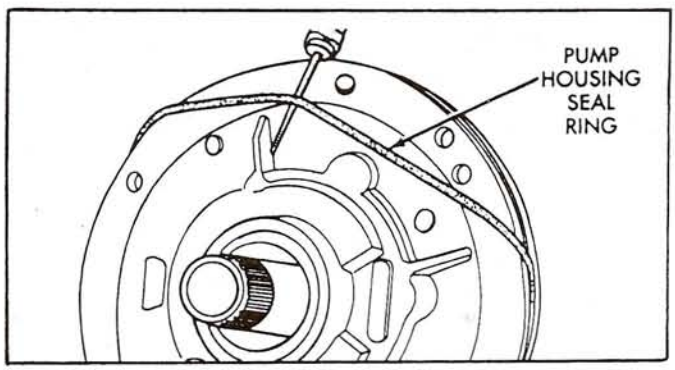

Figure 57

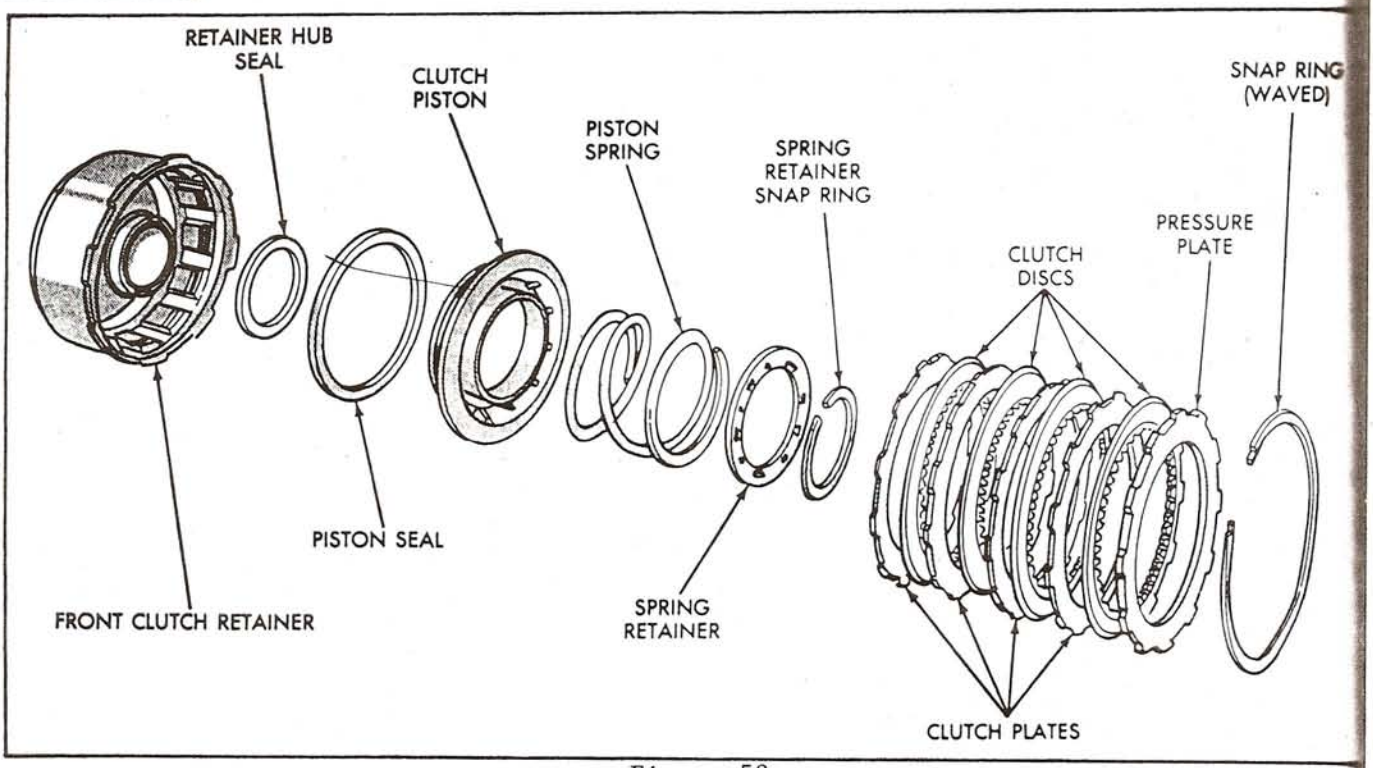

Figure 58

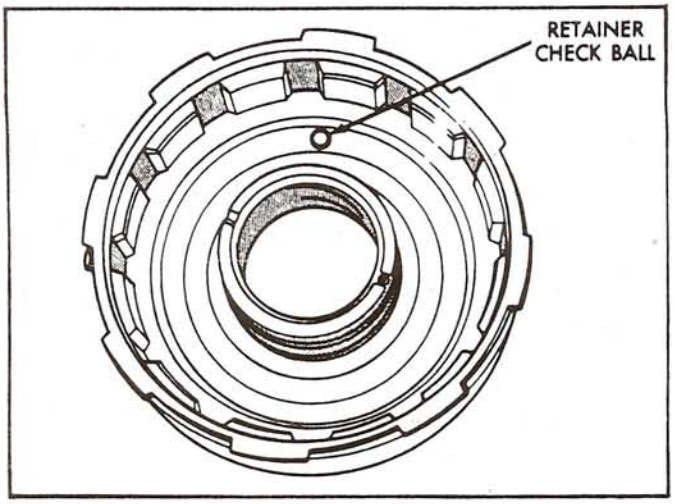

Figure 59

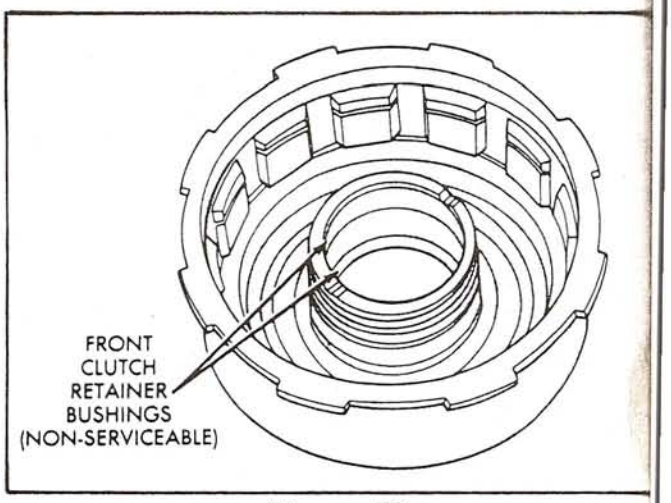

Figure 60

FRONT CLUTCH HOUSING ASSEMBLY

1. Clean the front clutch components with clean solvent and dry with compressed air (See Figure 58).
2. Check the ball capsule in front clutch housing for free movement and verify that it does not leak (See Figure 59). Leak check with small amount solvent.
3. Inspect the bushings in front clutch housing for wear or damage. Bushings for this location are not serviced. (See Figure 60).
4. Soak the lined plates in transmission fluid while assembling other parts.
5. Install new lip seal onto the front clutch piston, and lubricate with smal amount of Trans-Jel. Ensure that lip faces away from spring side of piston.
6. Install new lip seal into front clutc housing and lubricate with small amou of Trans-Jel. Ensure that lip faces interior of clutch drum.
7. Lubricate the front clutch piston with small amount of Trans-Je

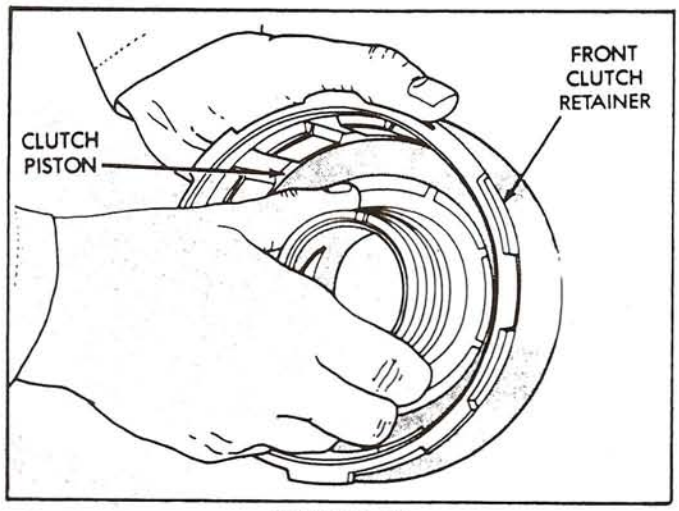

Figure 61

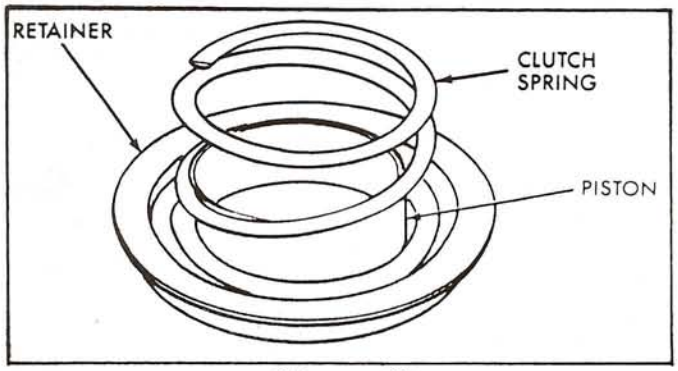

Figure 62

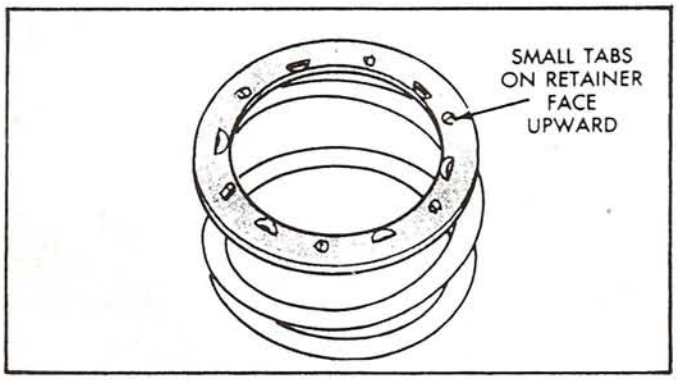

Figure 63

8. Install the front clutch piston in the front clutch housing with a twisting motion until fully seated (See Figure 61).
9. Position the front clutch return spring on piston, as shown in Figure 62.
10. Install the retainer on top of spring with small raised tabs facing up, as shown in Figure 63.
11. Compress the return spring and install snap ring (See Figure 64).

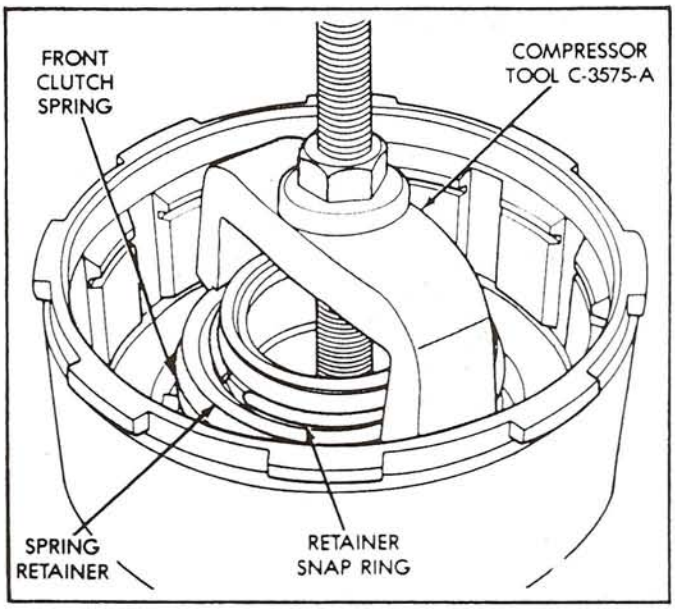

Figure 64

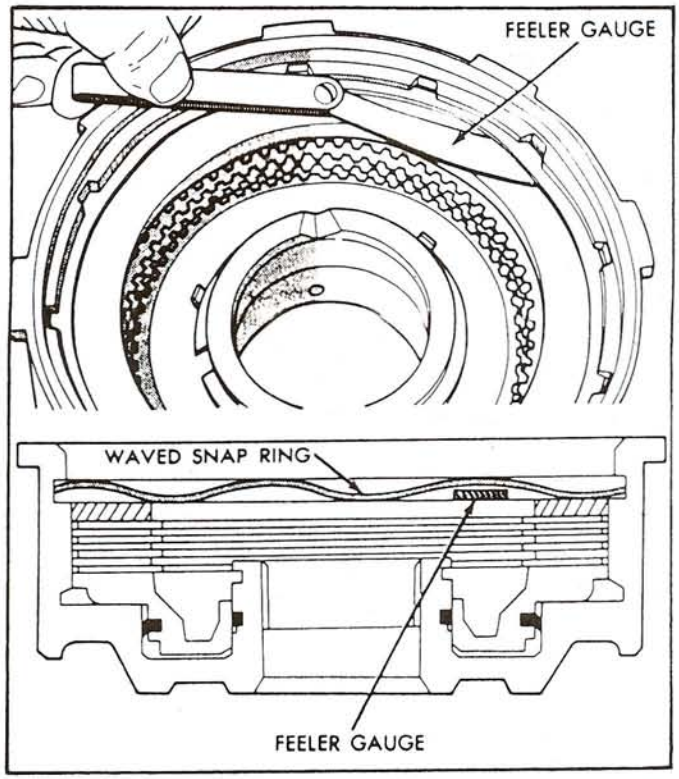

Figure 65

12. Remove compressor tools.
13. Install the clutch plates beginning with a steel plate and alternating with lined plates until you have installed four of each (See Figure 58).
14. After installing pressure plate and the waved snap ring, check clutch clearance with feeler gage (Figure 65). Clearance should be .060"-.080".
1.524- 2.032

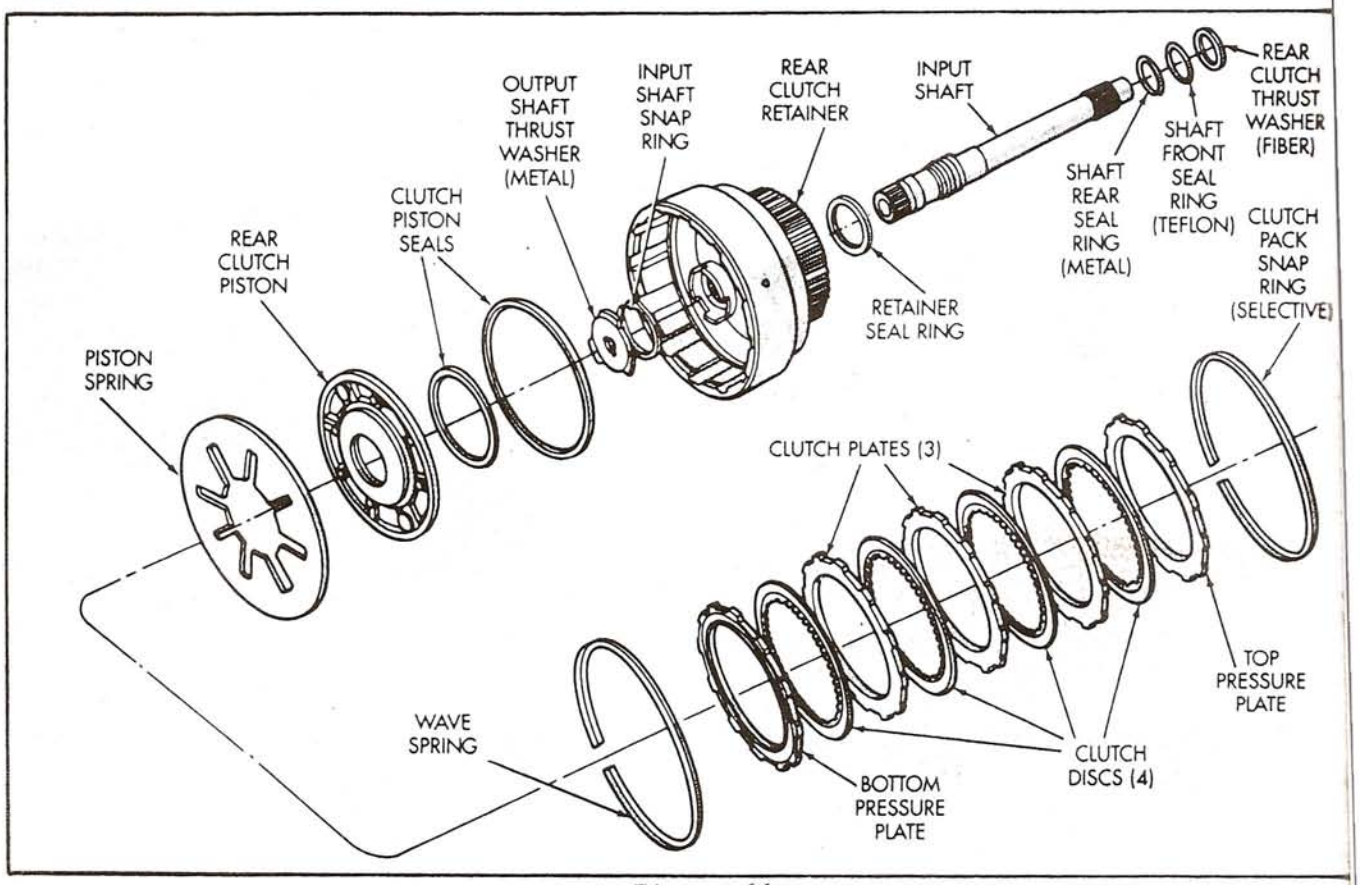

Figure 66

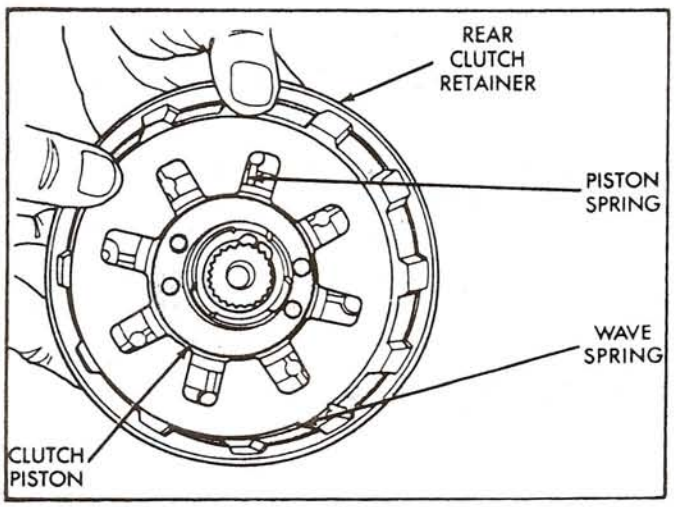

Figure 67

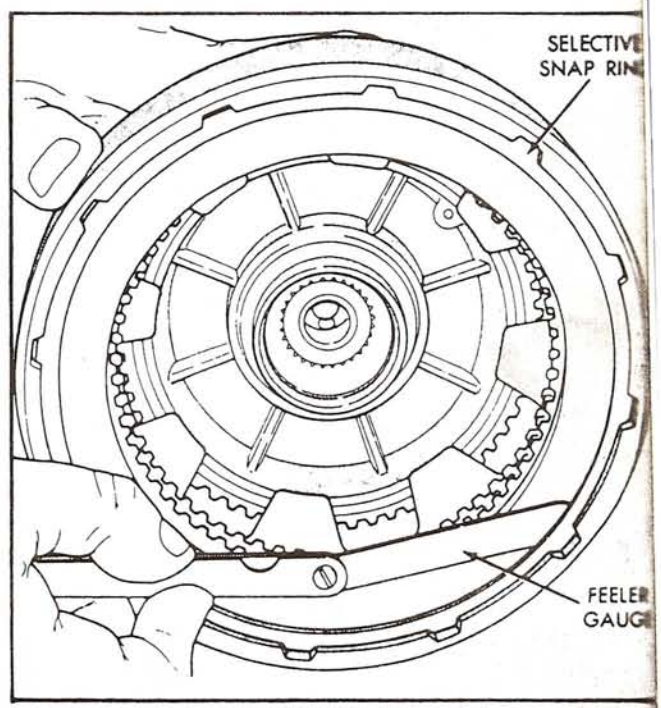

Figure 68

REAR CLUTCH HOUSING ASSEMBLY

1. Clean all rear clutch components with clean solvent and dry with compressed air (See Figure 66).
2. Inspect all rear clutch components for any damage or wear, replace as needed.
3. Soak the rear clutch lined plates in transmission fluid while assembling other parts.
4. Install new lip seals on rear clutch piston, with lips facing the interior of drum, and lubricate with Trans-Jel.

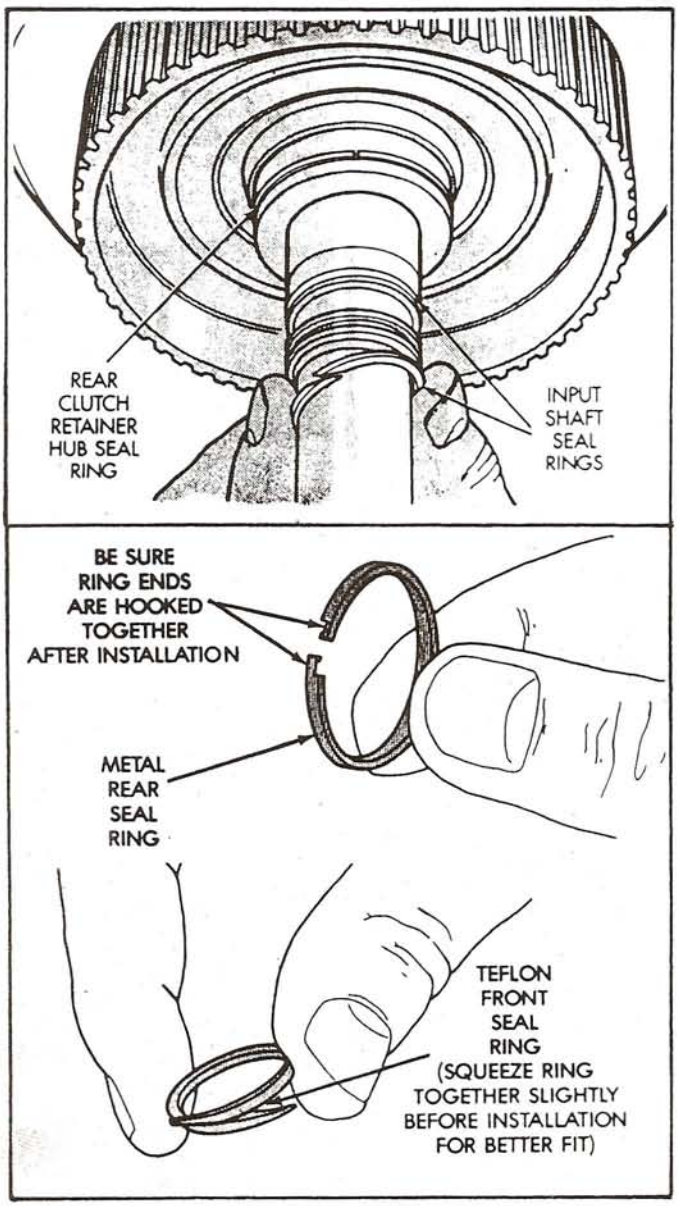

Figure 69

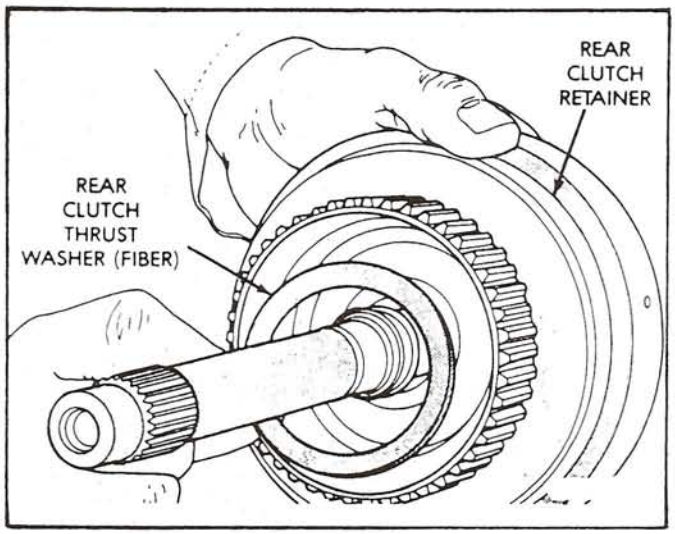

Figure 70

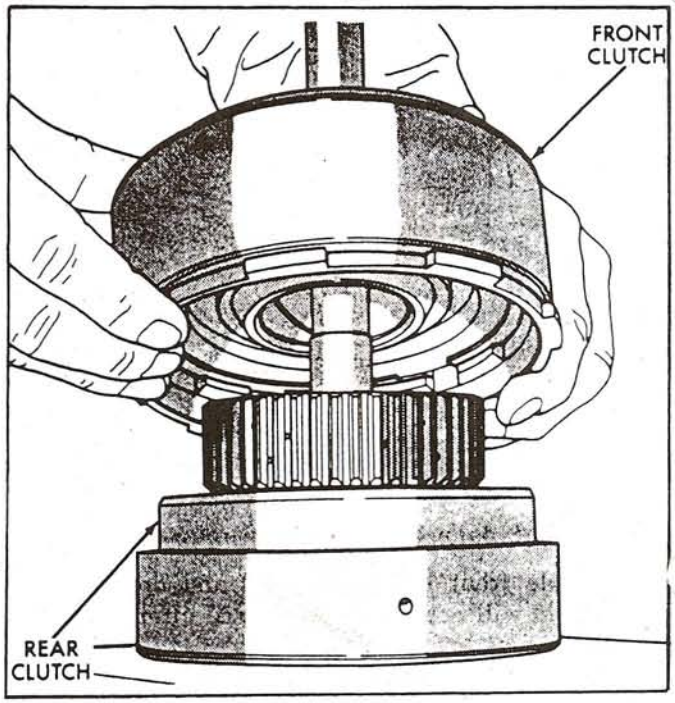

Figure 71

0.762 - 1.27

5. Install the rear clutch piston in the rear clutch drum with a twisting motion until fully seated.
6. Install bellville spring in drum on top of the piston, with concave side facing up (See Figure 67).
7. Install the waved snap ring in groove on top of bellville spring (Figure 67).
8. Install bottom pressure plate, ridged side facing down (See Figure 66).
9. Install clutch plates beginning with a lined plate and alternating with steel plates, until you have 4 lined and 3 steel plates installed (Figure 66).
10. Install top pressure plate and selective snap ring (See Figure 68).
11. Check clutch clearance with a feeler gauge as shown in Figure 68. Clearance should be .030"-.050".
12. Install one steel sealing ring and one scarf-cut teflon seal ring, as shown in Figure 69.
13. Install fiber thrust washer on the rear clutch drum as shown in Figure 70, and retain with Trans-Jel.
14. Install the front clutch housing onto the rear clutch housing, as shown in Figure 70, rotating the front clutch until fully seated, and set assembly aside for final assembly.

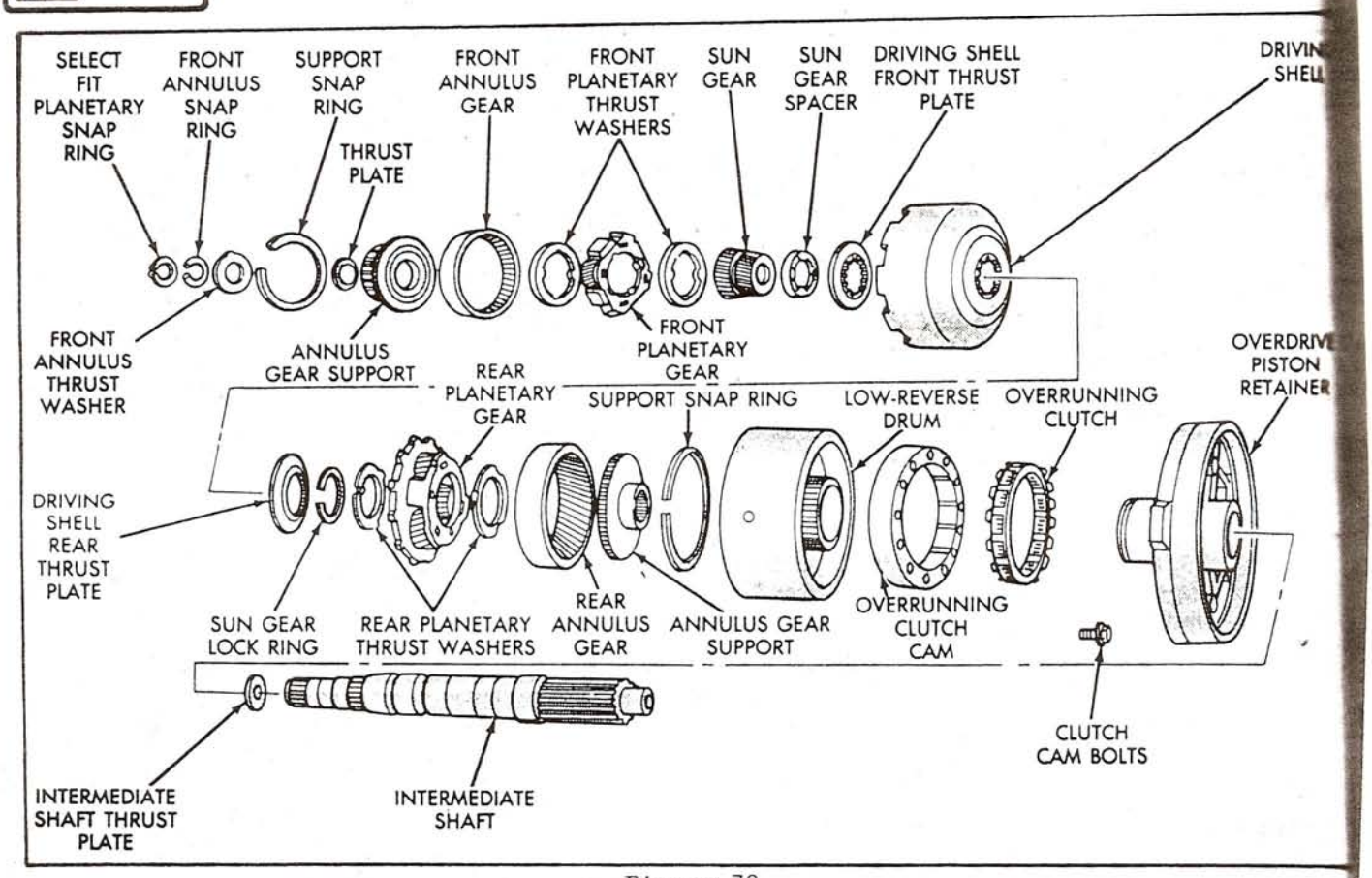

Figure 72

PLANETARY GEARTRAIN ASSEMBLY

1. Clean all planetary geartrain components with clean solvent (Figure 72).
2. Inspect all planetary components for any wear and/or damage.
3. Be sure the selective spacer groove on the intermediate shaft has no wear or damage.
4. Install rear thrust washer on the rear planetary, as shown in Figure 73, and retain with Trans-Jel.
5. Install the rear ring gear and support over and onto the rear planetary and engage on planetary gears (Figure 73).
6. Install assembled rear planetary and ring gear onto intermediate shaft, as shown in Figure 74.
7. Install front thrust washer on the rear planetary, as shown in Figure 75, and retain with Trans-Jel.
8. Install sun gear spacer on the sun gear as shown in Figure 76.
9. Install thrust plate over the sun gear and on top of spacer (See Figure 77). Note that thrust plates are the same, both front and rear.

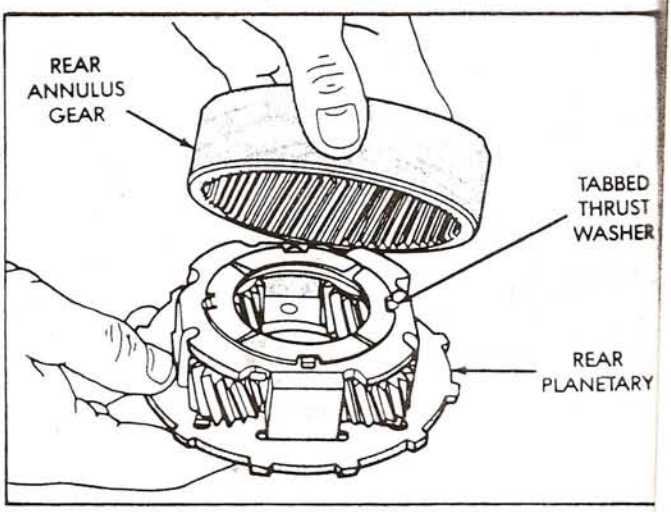

Figure 73

10. Insert sun gear into the driving shell as shown in Figure 78, and install the rear thrust plate (See Figure 78).
11. Position wood block on bench, as shown in Figure 79, and support sun gear on the wood block. This makes it easier to install sun gear locking ring.

Continued on Page 52.

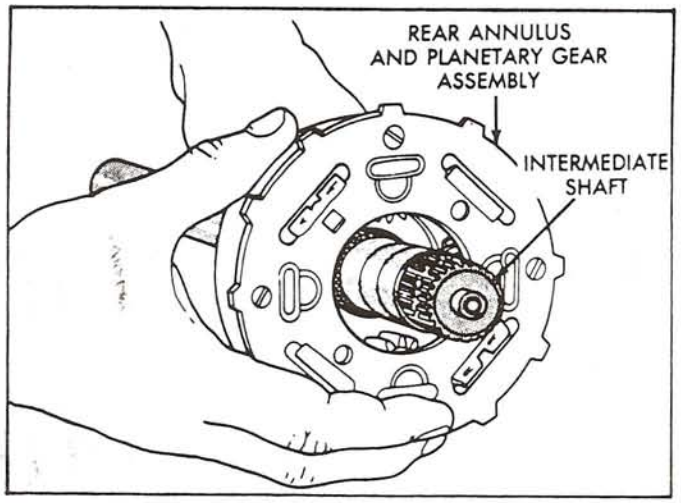

Figure 74

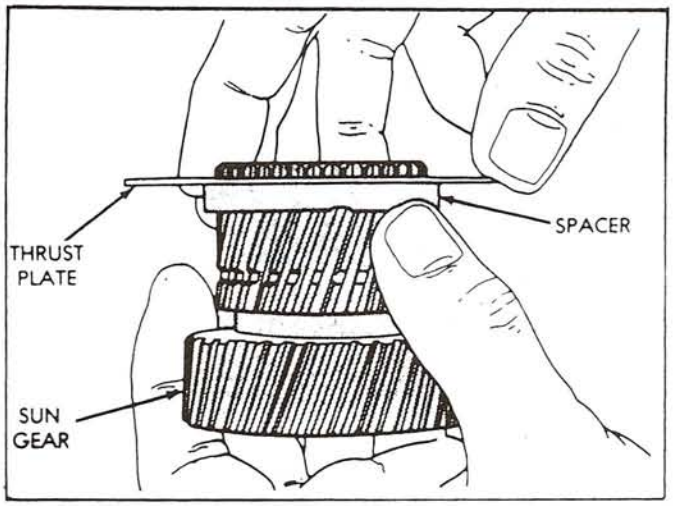

Figure 77

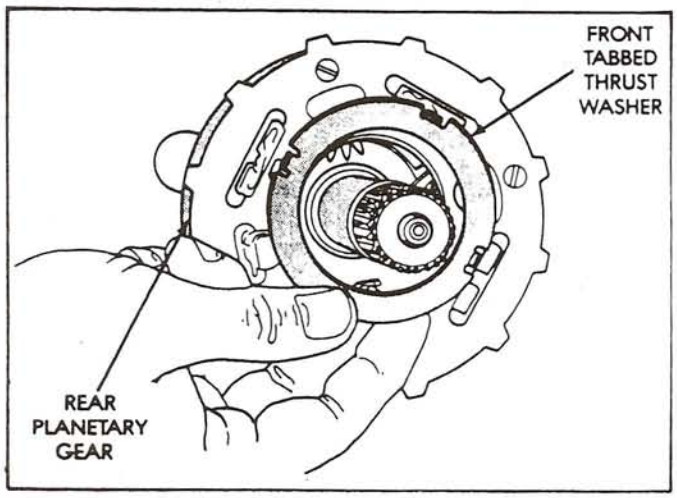

Figure 75

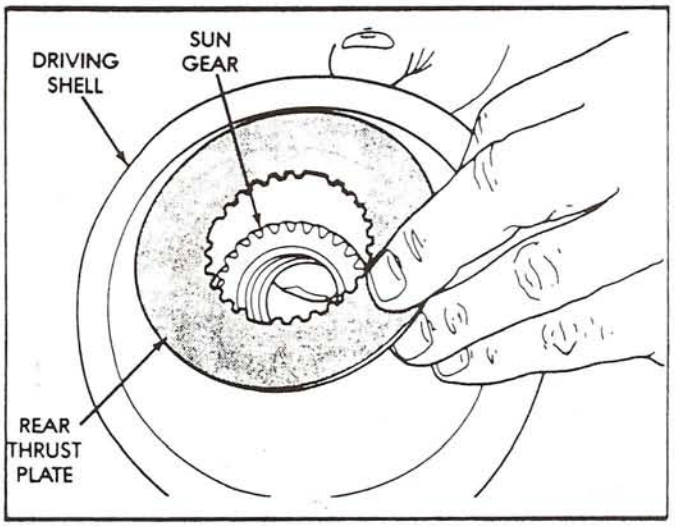

Figure 78

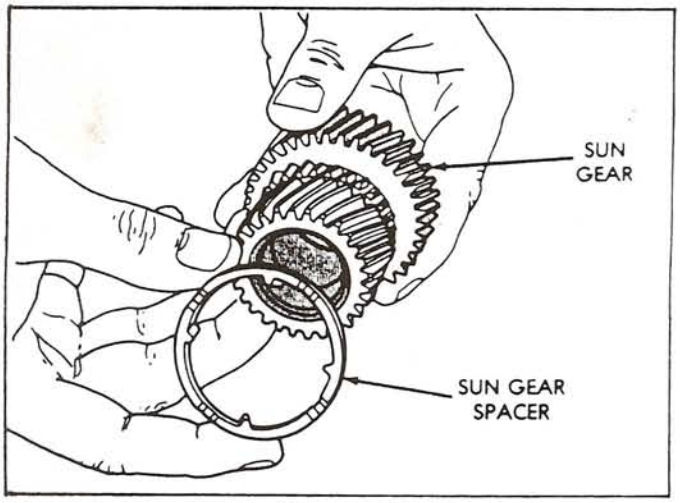

Figure 76

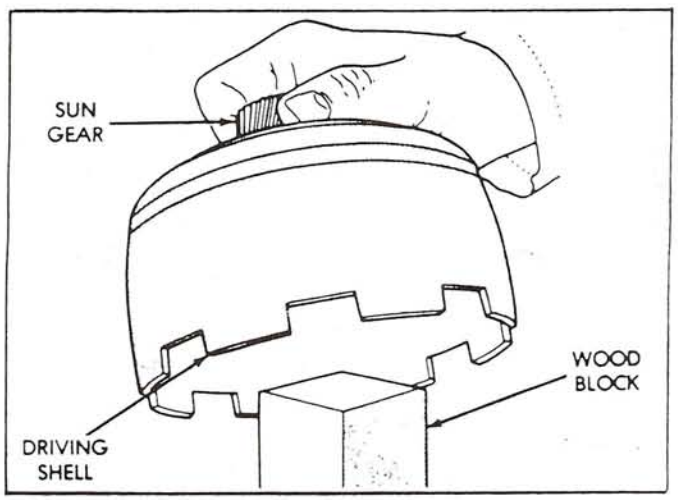

Figure 79

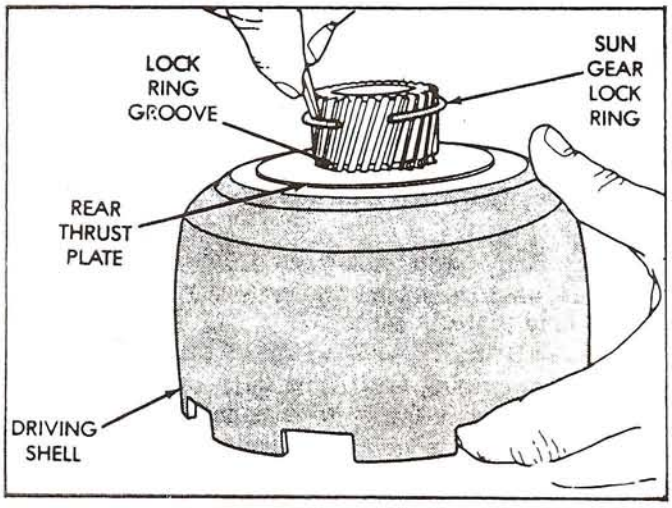

Figure 80

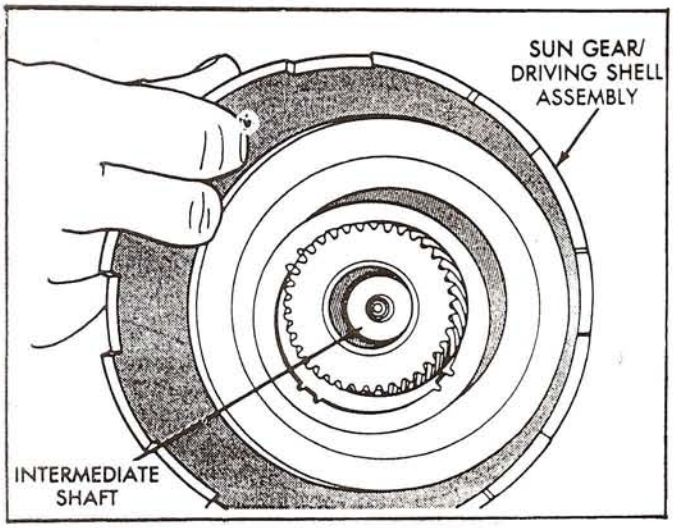

Figure 81

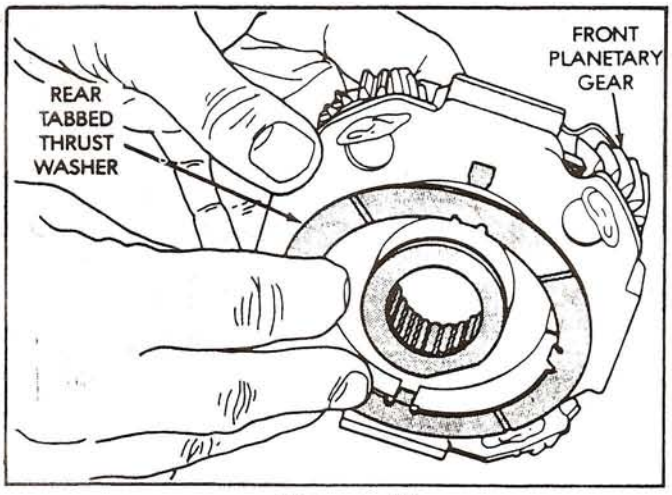

Figure 82

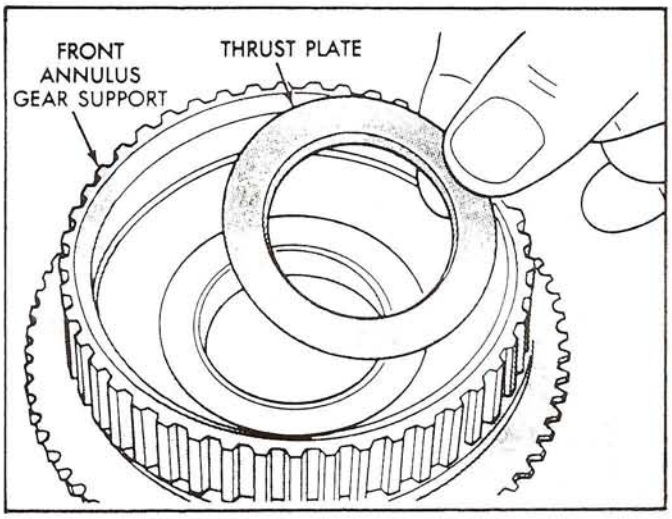

Figure 83

12. With the sun gear and shell setting on wood block, align rear thrust plate and install the sun gear locking ring, as shown in Figure 80.
13. Keep the wood block handy as it will also be used for the geartrain endplay check.
14. Install the assembled sun gear/driving shell onto the intermediate shaft, as shown in Figure 81, engaging it in the rear planetary gears.
15. Install rear thrust washer onto front planetary and retain with Trans-Jel, as shown in Figure 82.
16. Install front thrust washer onto front planetary and retain with Trans-Jel.
17. Install the front planetary onto the intermediate shaft, engaging the spline area and the gears (See Figure 84).
18. Position the thrust plate on the front ring gear, as shown in Figure 83, and retain with Trans-Jel.
19. Install front ring gear onto the front planetary, engaging the gears, shown in Figure 84.
20. Install front ring gear thrust washer ensuring the flat on washer is aligned with flat on planetary hub, and the tab on washer is facing forward, as shown in Figure 85.
21. Retain the thrust washer with Trans-Jel
22. Install the snap ring onto intermediate shaft using snap ring pliers, as shown in Figure 86.

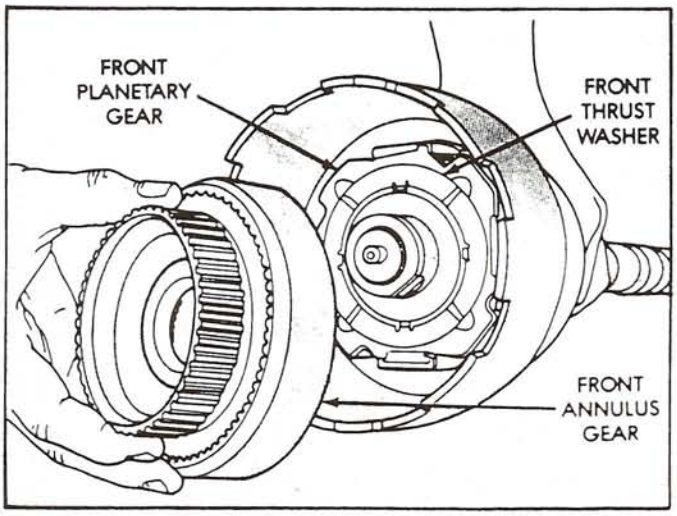

Figure 84

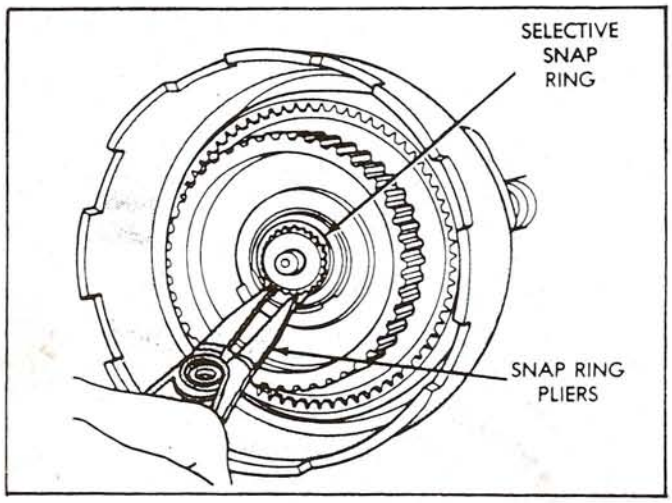

Figure 86

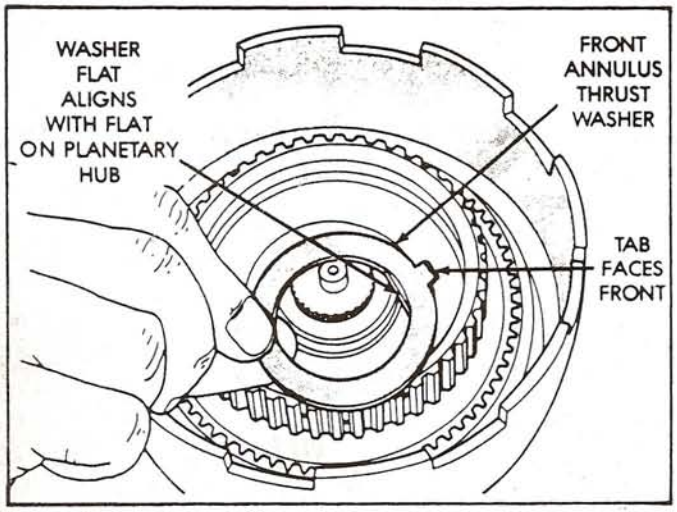

Figure 85

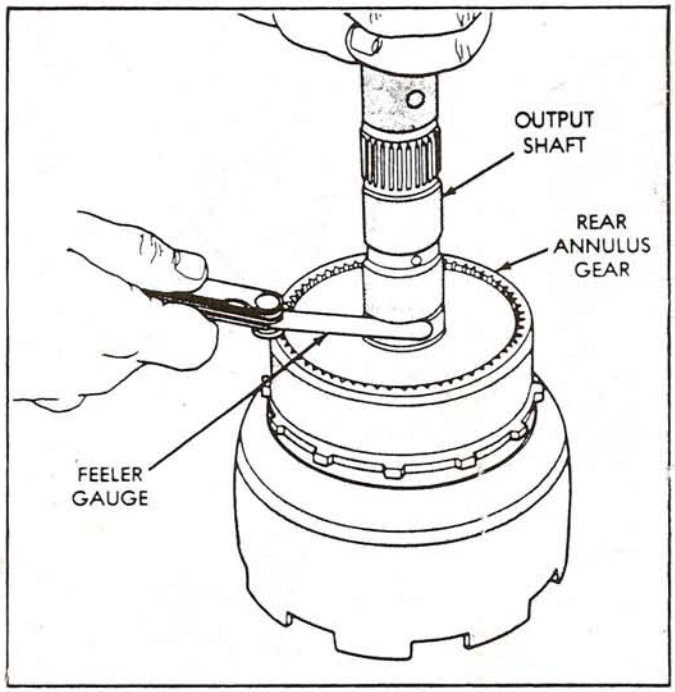

Figure 87

23. Turn the planetary geartrain assembly over so driving shell is facing bench, as shown in Figure 87.
24. Then support geartrain on wood block positioned under forward end of the intermediate shaft. This is necessary so geartrain parts will move up and down (See Figure 87).
25. Check planetary geartrain end-play with a feeler gauge as shown in Figure 87. Feeler gauge goes between the shoulder on intermediate shaft and the end of rear ring gear support (Figure 87).
26. Geartrain end-play should be between .005" and .045". If end-play is not correct, snap ring (or thrust washers) may have to be replaced.
27. Snap ring is available in 3 different thicknesses for adjustment purposes.
28. Set completed planetary geartrain Asm. aside for final assembly.

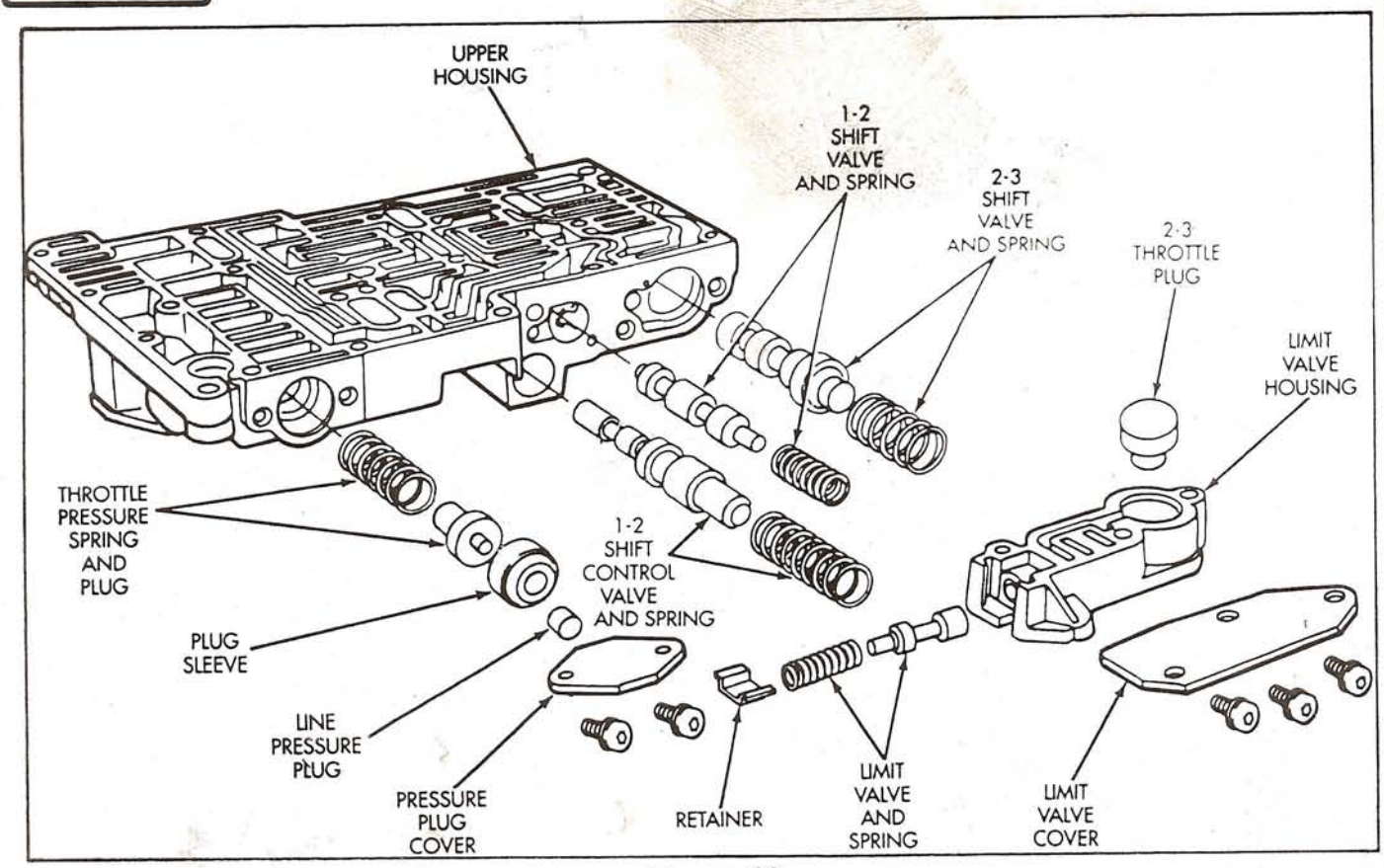

Figure 88

VALVE BODY REASSEMBLY

UPPER HOUSING VALVE INSTALLATION

1. Position upper valve body housing with worm track side facing up and the shift valve side facing as shown in Figure 88.
2. Install throttle pressure spring and valve, line pressure plug and sleeve, and cover plate as shown in Figure 88. Torque cover plate screws to 35 in.lbs.
3. Install limit valve, limit valve spring and retainer into limit valve housing, as shown in Figure 88.
4. Install 2-3 throttle plug into limit valve housing (See Figure 88).
5. Install 1-2 shift control valve and the spring into upper housing (Figure 88).
6. Install 1-2 and 2-3 shift valves and springs in upper housing (Figure 88).
7. Install limit valve housing assembly on top of the 3 springs, compress and install 3 screws with cover plate, as shown in Figure 88.
8. Torque the 3 screws to 35 in.lbs.
9. Lubricate all valves with transmission fluid or Lube-Gard spray assembly lube.
10. Turn upper valve body housing over and position as shown in Figure 89.
11. Insert the plastic guides in each end of shuttle valve secondary spring and install spring on the end of valve as shown in Figure 89.
12. Install the assembly into bore of the upper housing (See Figures 89 and 90).
13. Compress the secondary spring, install the "E" clip in groove at end of the shuttle valve (See Figure 90).
14. Install the shuttle valve cover and install the six retaining screws, shown in Figure 89.
15. Torque the six screws to 35 in.lbs.
16. Install the boost valve, boost valve spring, and retainer, as shown Figure 89.
17. Install the boost valve cover plate as shown in Figure 89, and torque three screws to 35 in.lbs.
18. Install the 1-2 governor plug into the upper housing (See Figure 91).

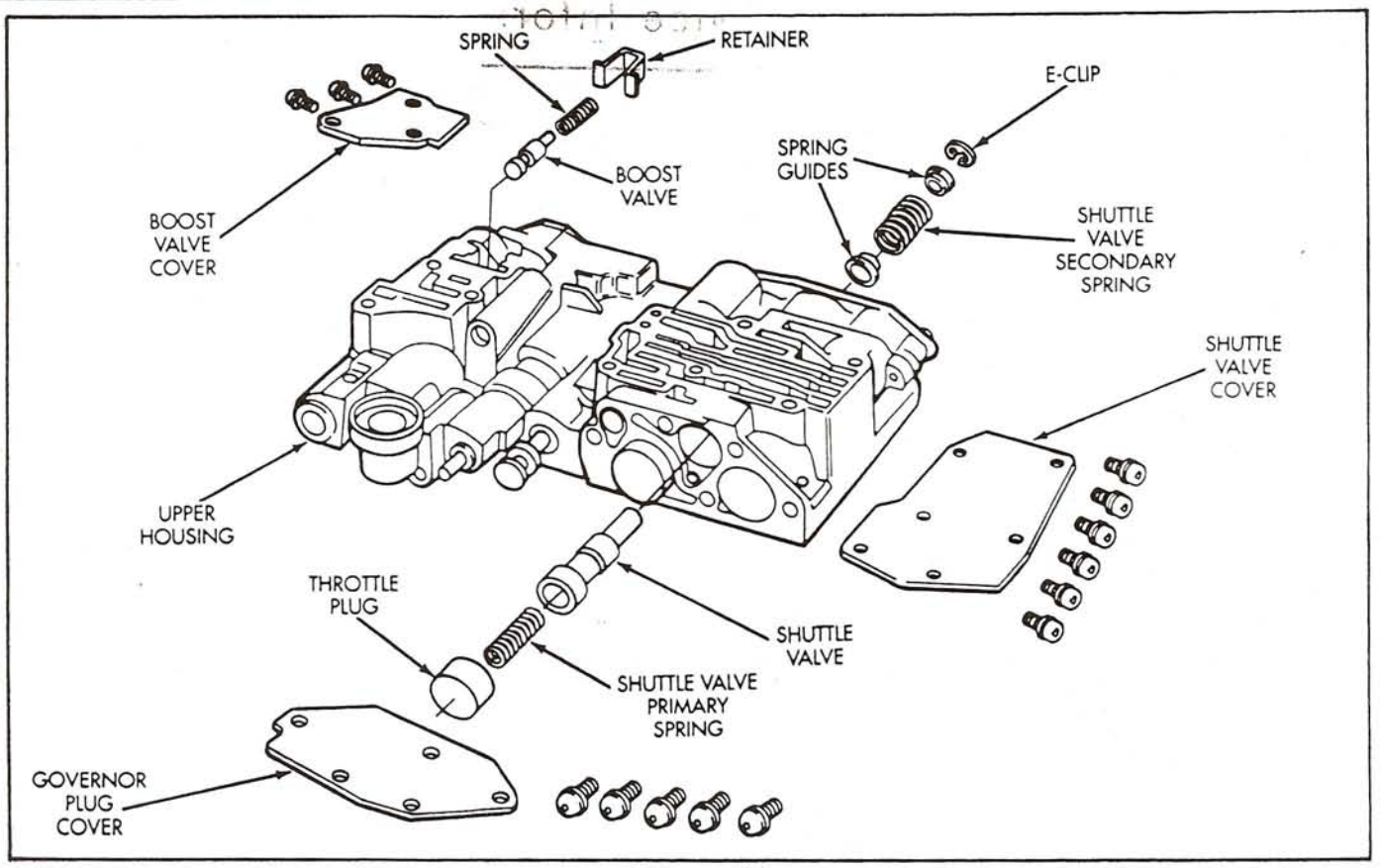

Figure 89

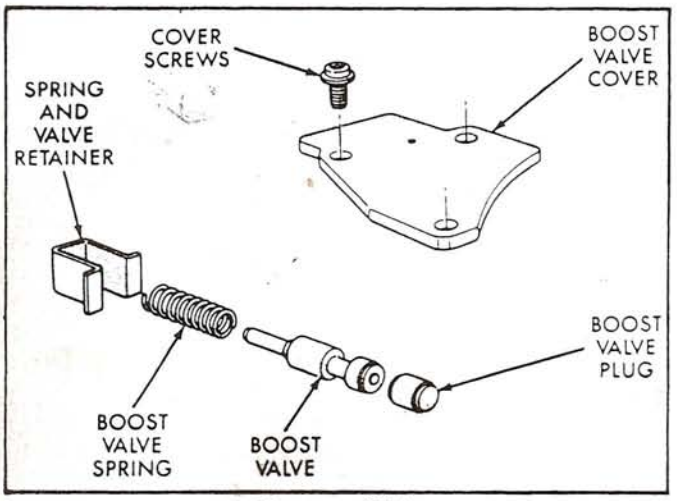

Figure 89A

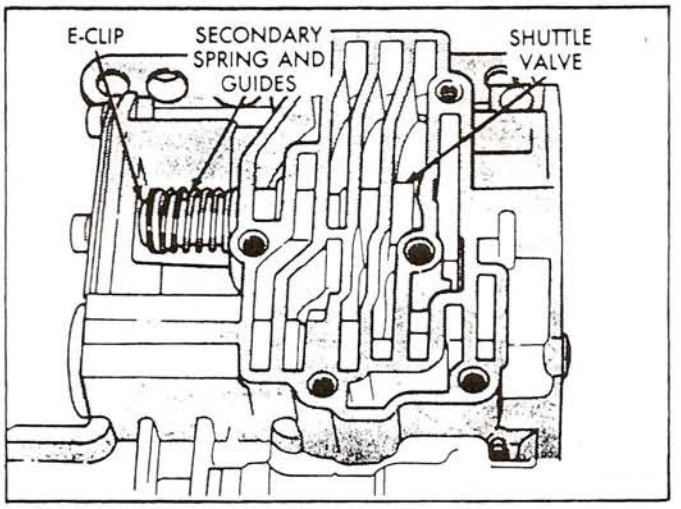

Figure 90

19. Install the 2-3 governor plug into the upper housing (See Figure 91).
20. Install the shuttle valve primary spring and throttle plug, as shown Figure 89.
21. Install governor plug cover plate and five screws as shown in Figure 91.
22. Torque 5 screws to 35 in.lbs.
23. Do not install any valves in remaining four bores in the upper valve body.
24. These four valve trains will be installed after the complete assembly.

Continued on Page 56.

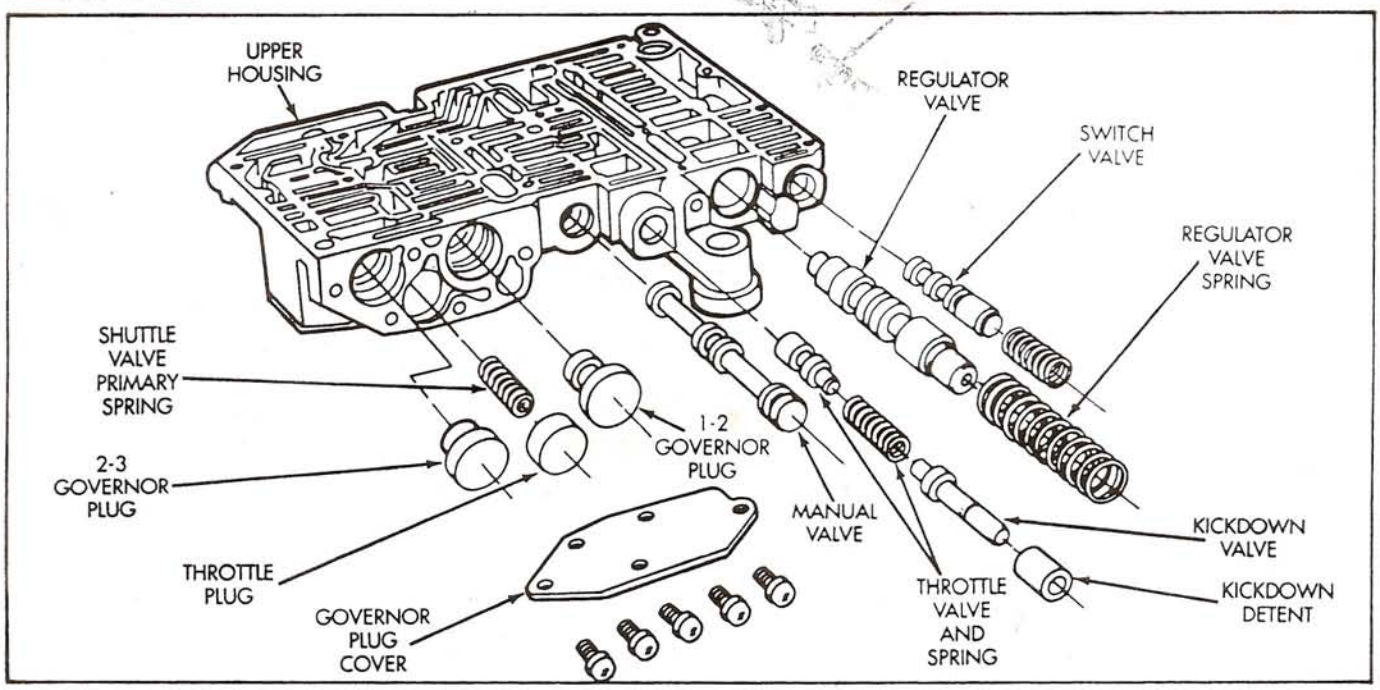

Figure 91

3-4 ACCUMULATOR ASSEMBLY

1. Install new seals on 3-4 accumulator piston, as shown in Figure 92.
2. Lubricate 3-4 accumulator bore in the 3-4 accumulator housing with Trans-Jel, lubricate piston seals, and install the piston into the housing (See Figure 92)
3. Install the 3-4 accumulator spring in the housing on top of piston as shown in Figure 92.
4. Install the cover plate and the five screws, as shown in Figure 92.
5. Torque cover plate screws to 35 in.lbs.

Continued on Page 57.

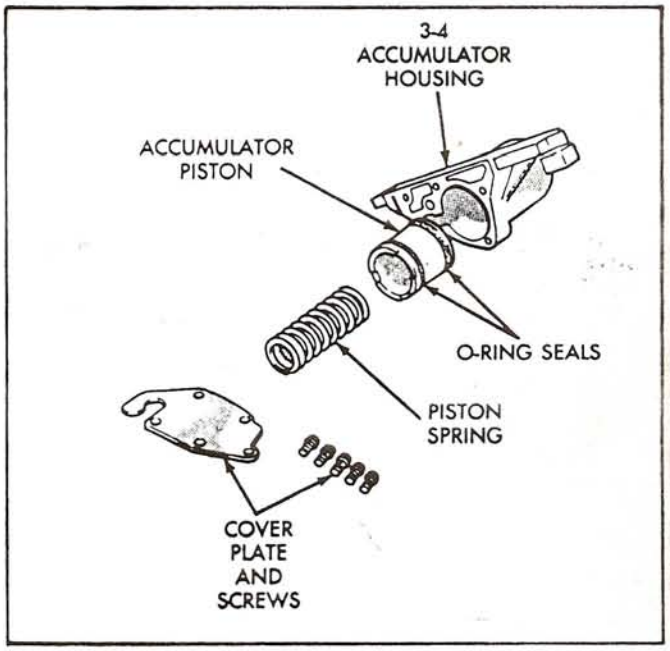

Figure 92

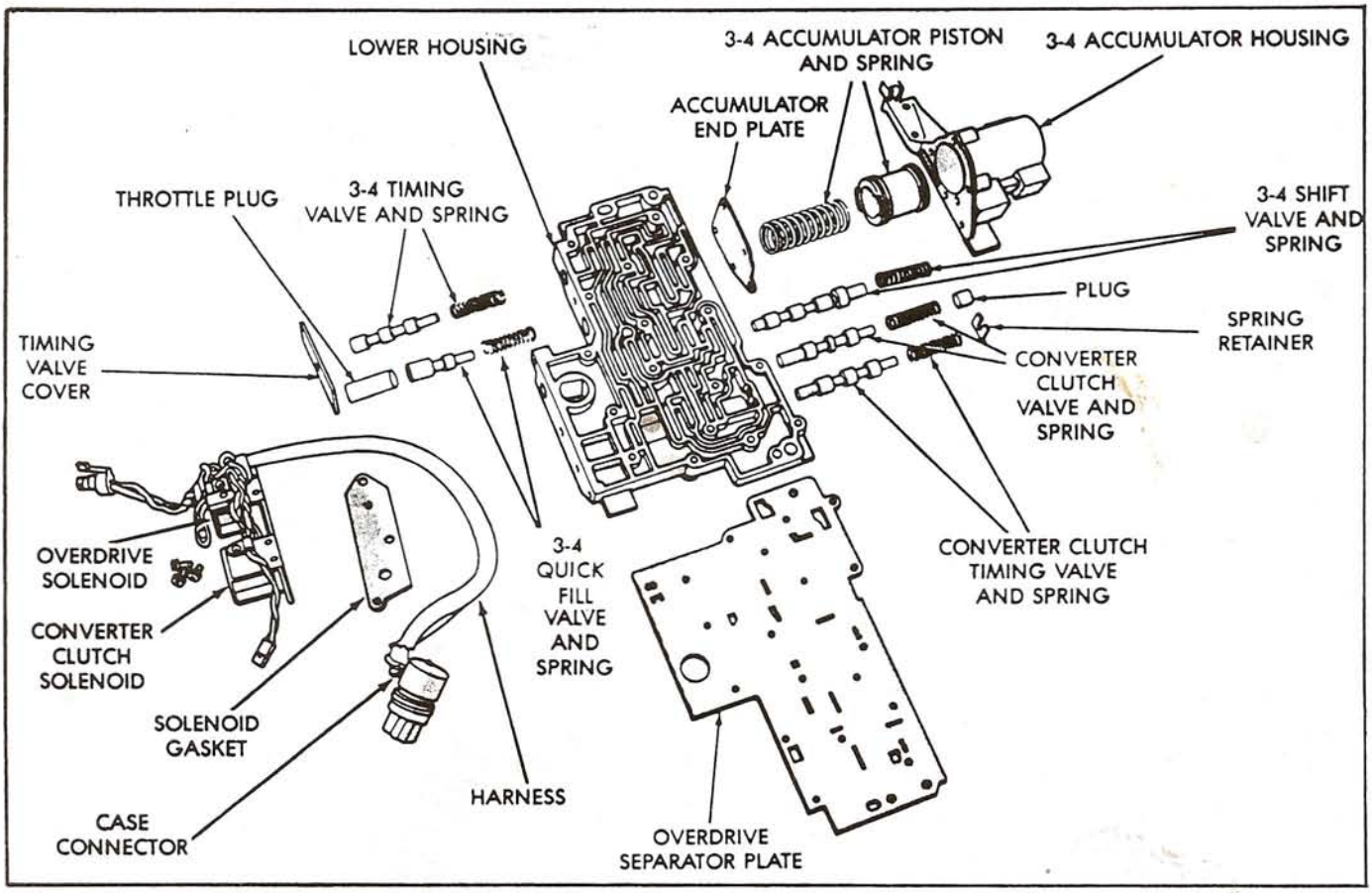

Figure 93

LOWER HOUSING VALVE INSTALLATION

1. Position lower valve body housing as shown in Figure 93.
2. Lubricate lower housing valves and the housing bores with clean transmission fluid, or Lube-Gard spray lube.
3. Install 3-4 timing valve spring, and 3-4 timing valve in lower housing, as shown in Figure 93.
4. Install 3-4 quick-fill valve spring, quick-fill valve, and throttle plug, as shown in Figure 93.
5. Install timing valve cover plate and screws as shown in Figure 93. Torque screws to 35 in.lbs.
6. Install converter clutch timing valve, spring and retainer (See Figure 93).
7. Do not install the two remaining valve trains until both halves of the valve body have been assembled together.

3-4 QUICK FILL VALVE OPERATION

The 3-4 shuttle valve is replaced by a 3-4 Quick Fill Valve in the 42RE valve body. The valve maintains a pre-fill pressure of approximately 5 PSI in the O.D. clutch circuit. Prefill pressure is maintained in all forward ranges. The purpose of the valve is faster engagement of the overdrive clutch during 3-4 upshifts.

In operation, the valve temporarily bypasses the clutch piston feed orifice at the start of a 3-4 upshift. This exposes a larger passage into the piston retainer resulting in a much faster clutch fill and overdrive clutch apply sequence.

Continued on next Page.

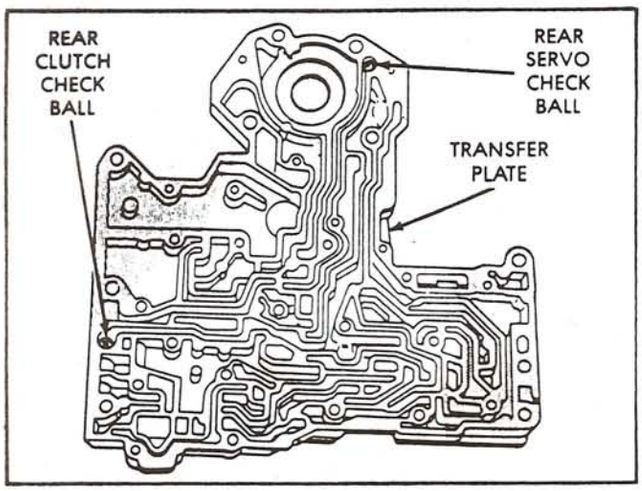

Figure 94

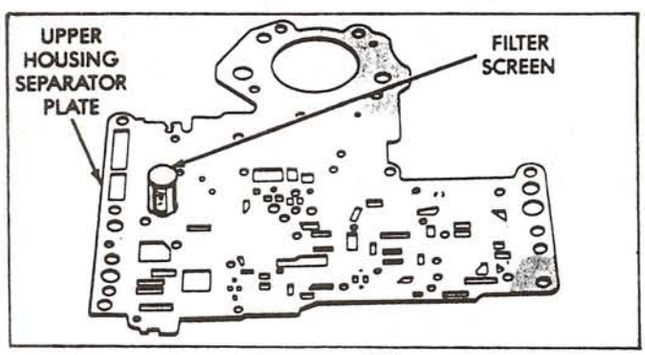

Figure 95

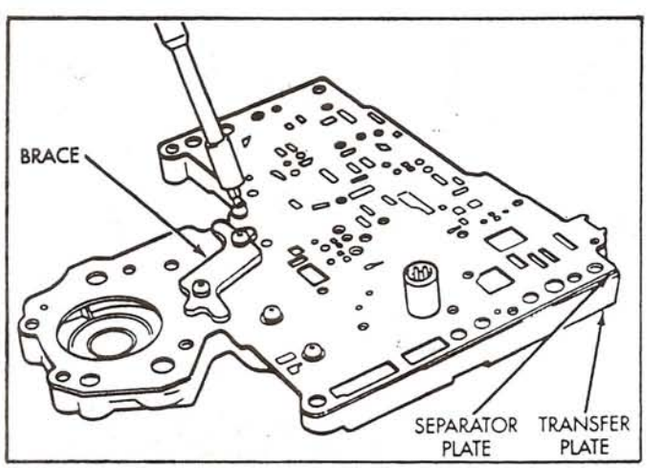

Figure 96

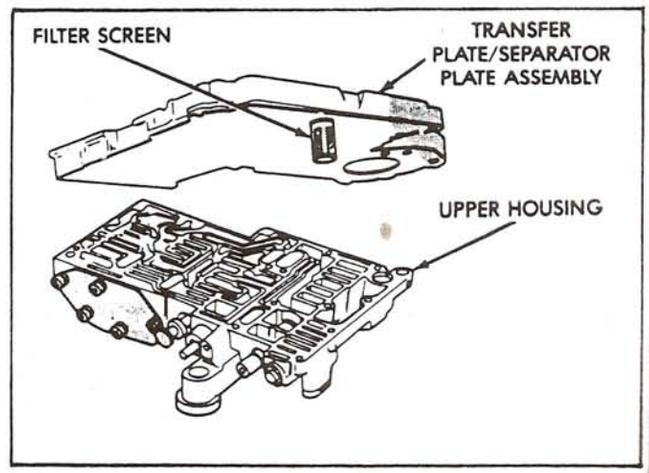

Figure 97

ASSEMBLE UPPER AND LOWER HOUSINGS

1. Position transfer plate on bench with worm track side facing up, as shown in Figure 94.
2. Install the rear clutch and rear servo checkballs (1/4" balls) in the transfer plate, in the positions shown in Figure 98.
3. Install the filter screen into spacer plate, as shown in Figure 95.
4. Align and position the spacer plate on transfer plate as shown in Figure 96.
5. Install the tension plate with screws and the 3 remaining spacer plate attaching screws, as shown in Figure 96.
6. Torque the 5 screws to 35 in.lbs.
7. Position upper housing so the internal passages and checkball pockets are facing upward, as shown in Figure 98.
8. Install the checkballs into the upper housing in the positions shown in Figure 98.
9. Note that one of the checkballs is a larger diameter than the other six (See Figure 98).
10. Install the assembled transfer plate and spacer plate on the upper housing as shown in Figure 97.
11. Ensure that filter screen is seated in the proper upper housing recess.

Continued on Page 60.

42RE CHECKBALL LOCATIONS

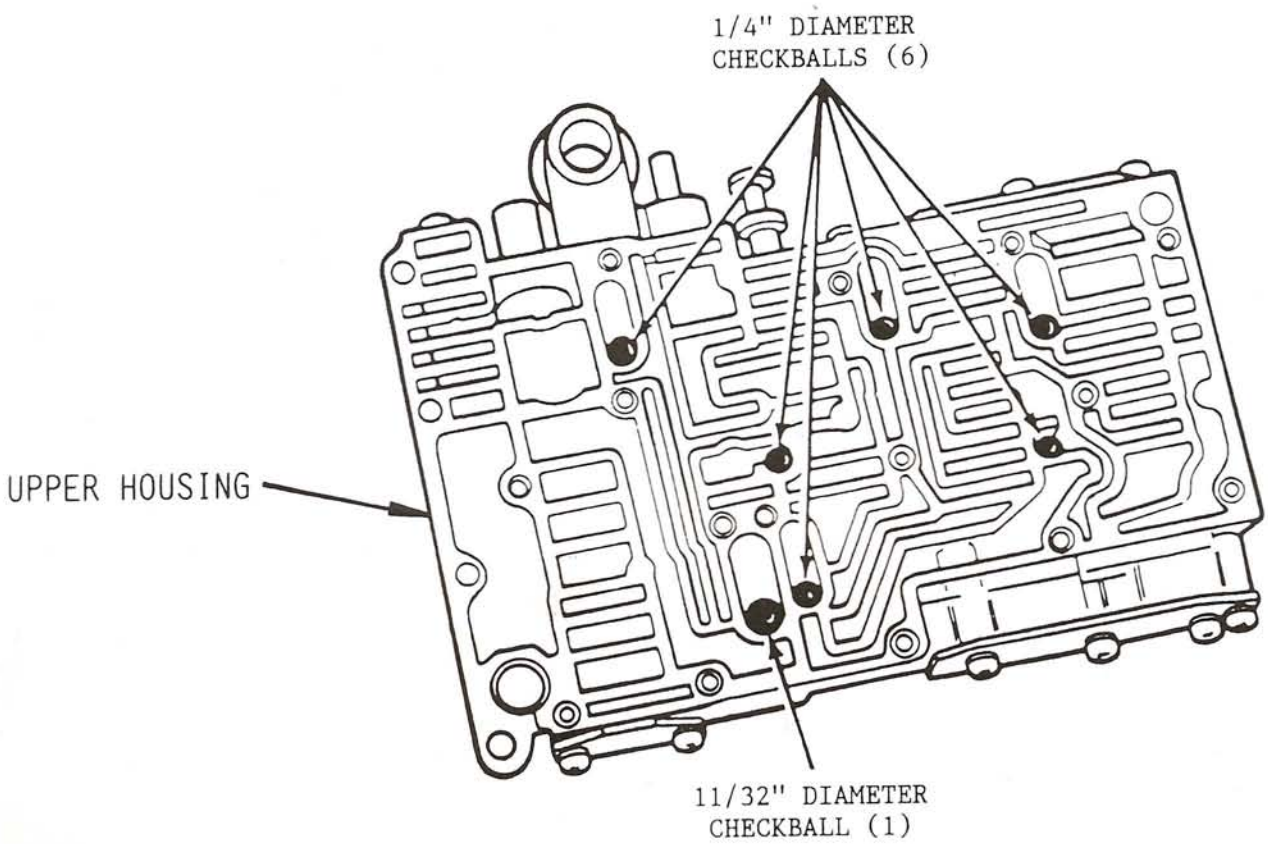

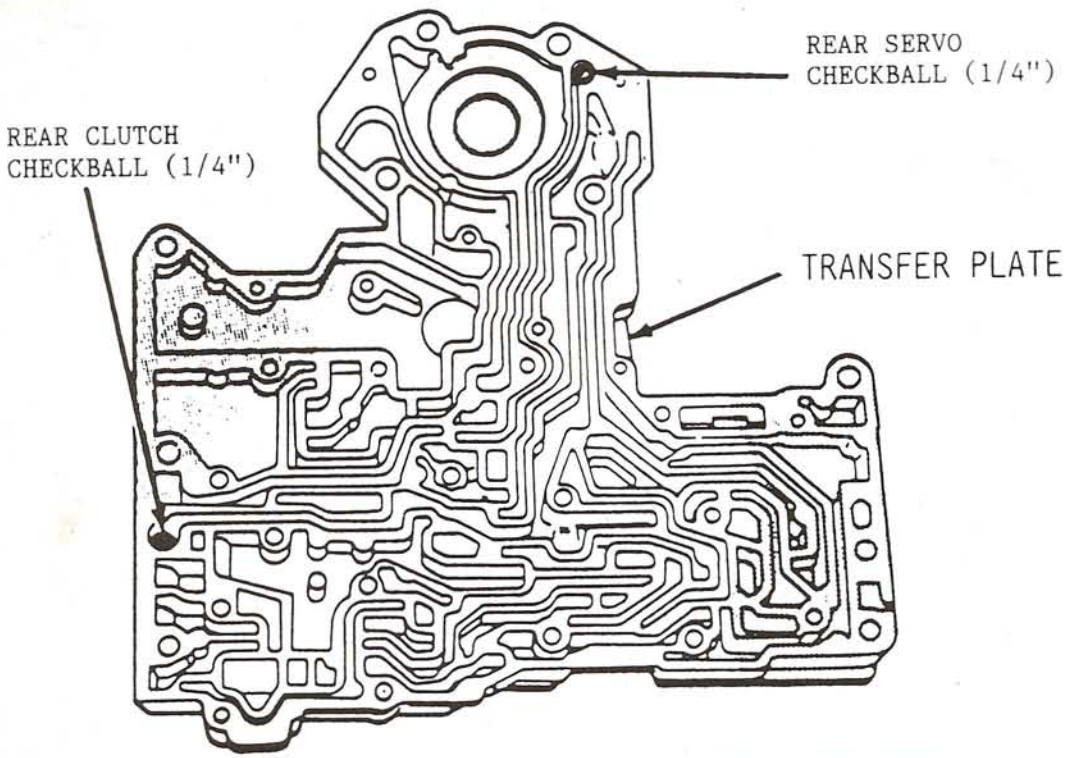

Figure 98

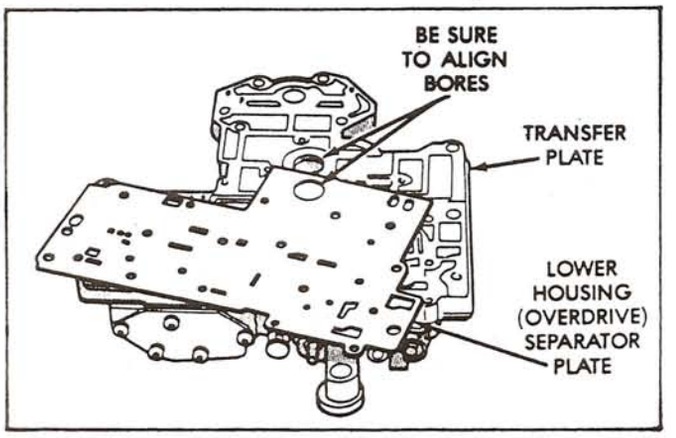

Figure 99

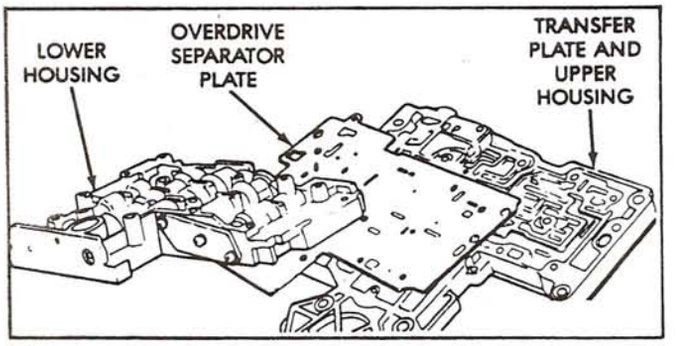

Figure 100

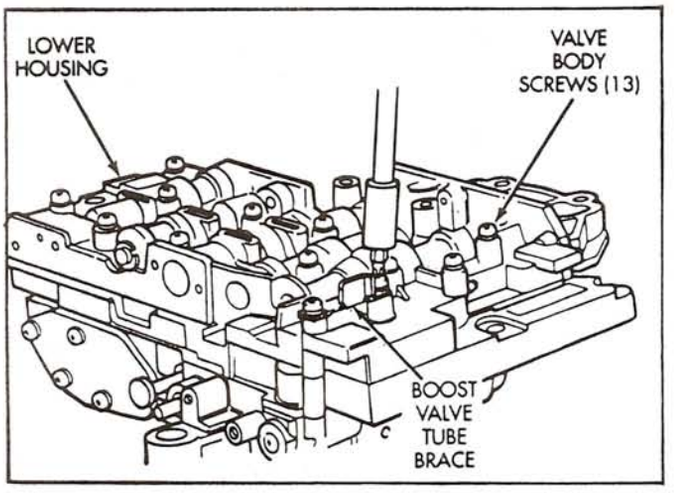

Figure 101

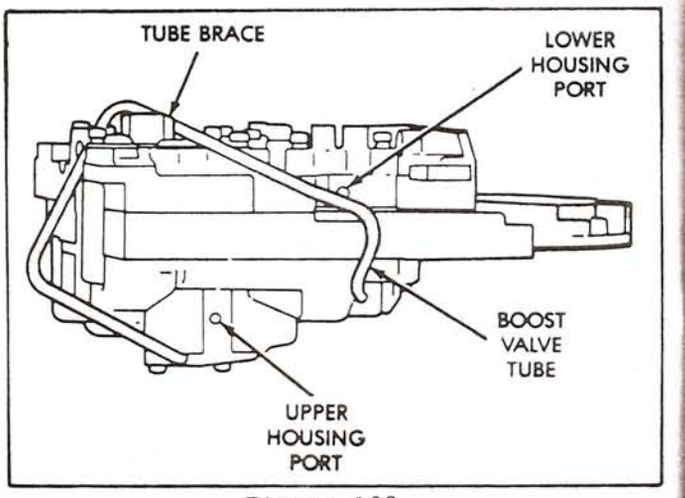

Figure 102

12. Now very carefully grasp both halves at once and turn the entire assembly over and lay it as shown in Figure 99.
13. Position the lower housing spacer plate on transfer plate and align, as shown in Figure 99.
14. Install lower valve body housing on top of spacer plate (See Figure 100).
15. Install and start by hand the 13 valve body screws, making sure that the tube brace is installed in proper position, as shown in Figure 101.
16. Torque valve body screws to 35 in.lbs, starting at the center and working out to the sides.
17. Lubricate boost valve tube ends with transmission fluid or Trans-Jel.
18. Position boost valve tube behind tube brace, as shown in Figure 102.
19. Start the tube in lower housing port first, and then swing tube downward and work opposite end of the tube into the upper housing port (See Figure 102).
20. Seat both ends of the boost valve tube once they are in position.
21. Note that tube brace may be bent slightly to ease the installation and then resecured (See Figure 102).
22. Install the 3-4 shift valve and spring as shown in Figures 93 and 103.
23. Install the converter clutch valve, the converter clutch valve spring and plug, as shown in Figures 93 and 103.
24. Loosely attach the accumulator housing using only the right side screw, shown in Figure 104.
25. Install only one screw at this time, as accumulator housing must be free to pivot up for easier installation.

26. Position plug on end of the converter clutch valve spring (See Figure 103).
27. Swing accumulator housing upward over the valve springs and plug, while you are holding the springs and plug compressed.
28. Hold accumulator housing firmly in place, and install the two remaining attaching screws (See Figure 105).
29. Be sure that springs and the converter clutch valve plug are seated properly. (See Figure 105).
30. Torque the 3 accumulator housing screws to 35 in.lbs. (See Figure 105).

Continued on Page 62.

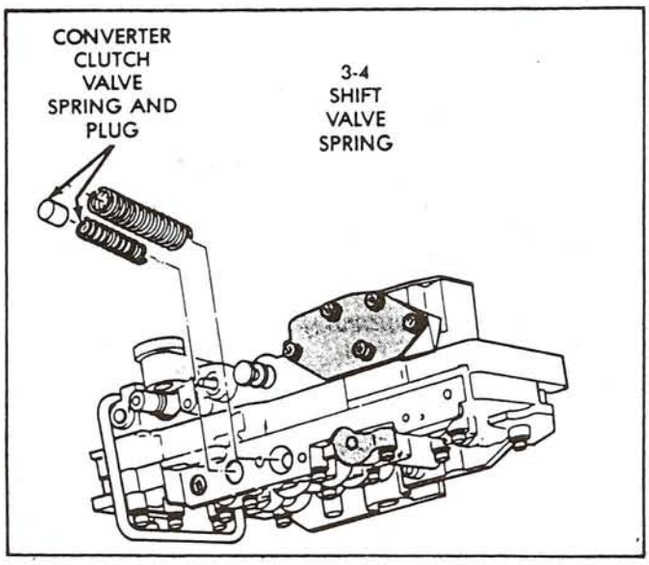

Figure 103

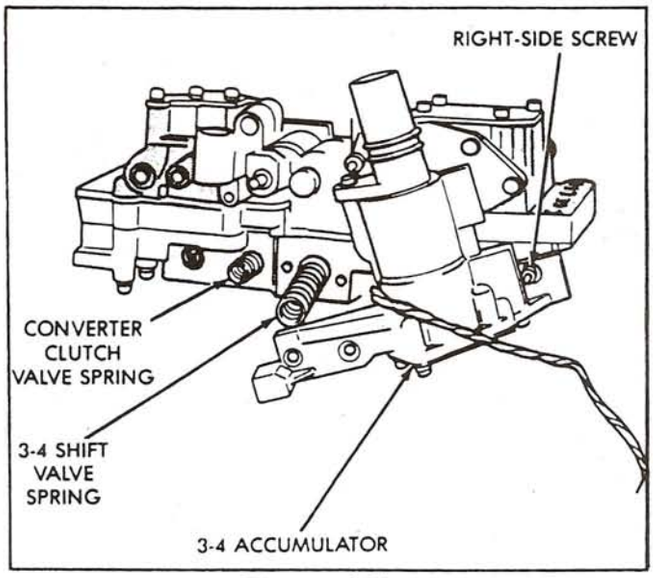

Figure 104

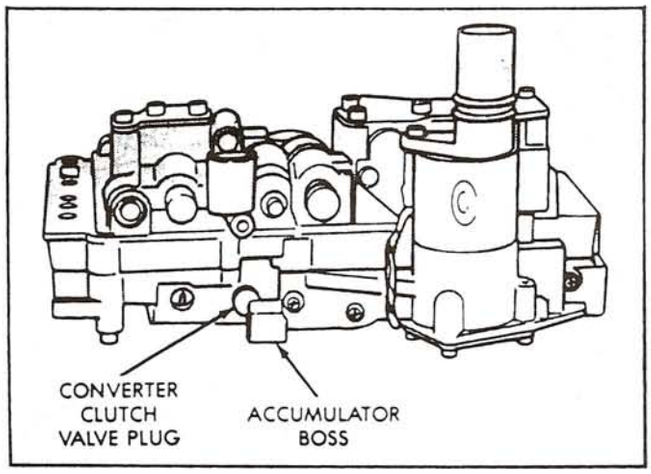

Figure 105

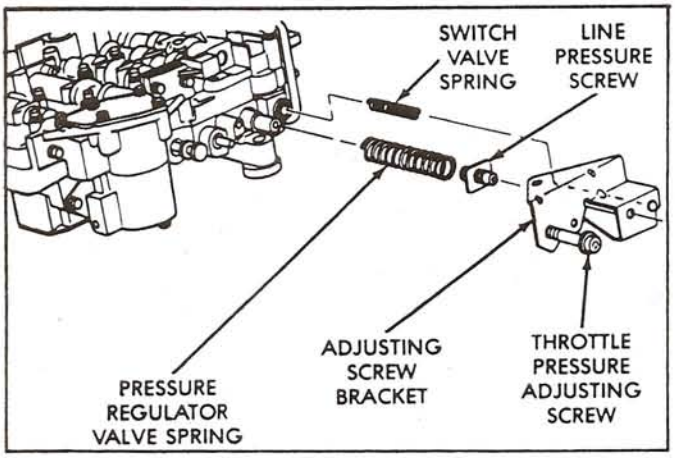

Figure 106

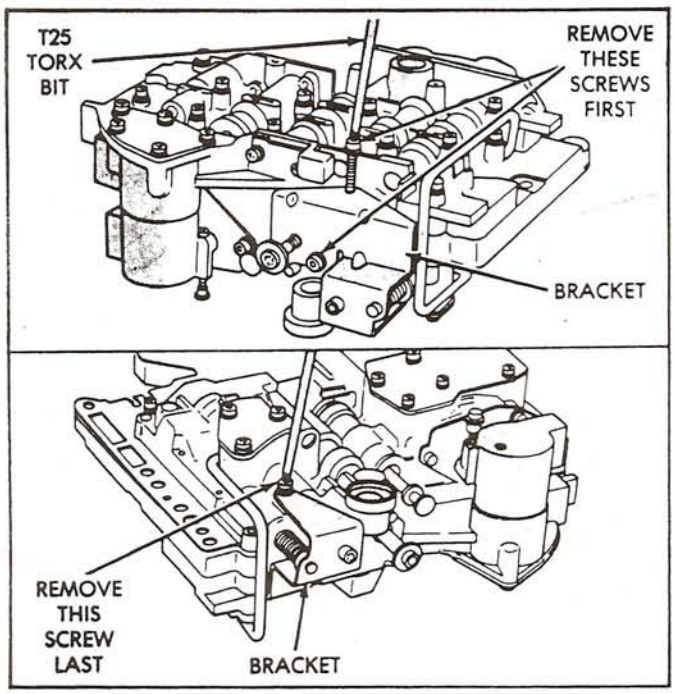

Figure 107

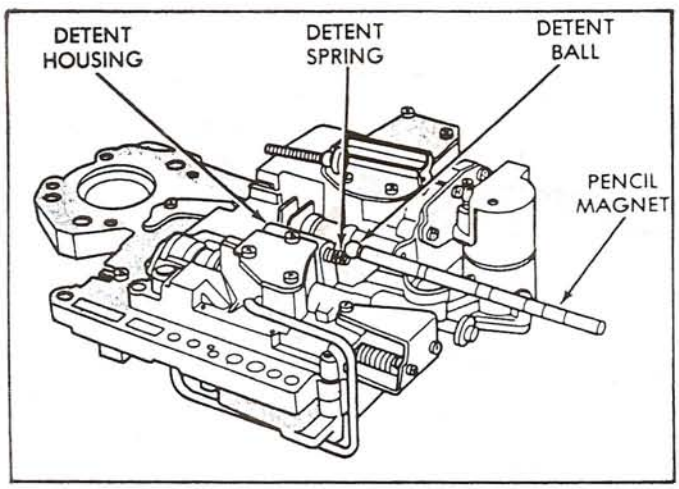

Figure 108

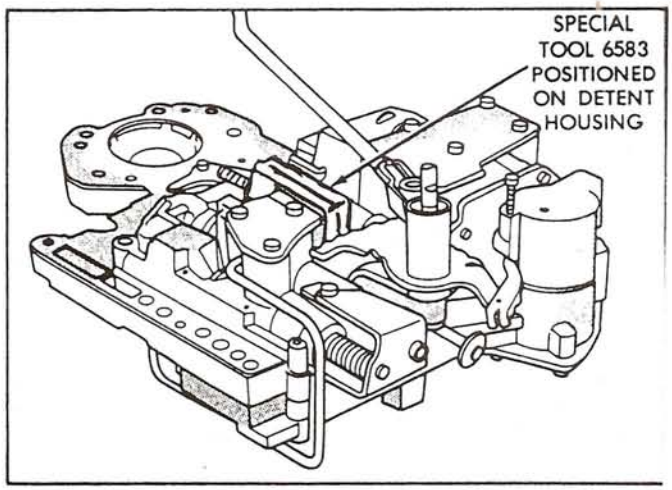

Figure 109

31. Install the manual valve into the bore in the upper housing (See Figure 91).
32. Install the throttle valve and spring, kickdown valve, and kickdown detent as shown in Figure 91.
33. Install the pressure regulator valve in the bore in upper housing as shown in Figure 91.
34. Install the switch valve into the bore in the upper housing (See Figure 91).
35. Position line pressure adjusting screw in the adjusting screw bracket.
36. Install pressure regulator spring on the end of pressure regulator valve, as shown in Figure 106.
37. Install switch valve spring on tang at end of adjusting screw bracket (See Figure 106).
38. Position adjusting screw bracket onto valve body, aligning valve springs, and press bracket into place. Refer to Figure 106 and 107.
39. Install the short, upper bracket screw first, and long bottom screw last (See Figure 107).
40. Torque all 3 screws to 35 in.lbs.
41. Install manual lever detent spring and ball in upper housing, (Figure 108).
42. Retain detent ball and spring in the housing with Retainer Tool 6583, shown in Figure 109.
43. Install throttle lever in the upper housing, then install the manual lever over throttle lever and start manual lever into housing (See Figure 110).
44. Ensure that manual lever is aligned with detent ball and engaged properly into the manual valve, as shown in Figure 111.

45. Press down on manual lever until it is fully seated, while holding up on the throttle lever.
46. Remove the detent ball retainer tool after lever is fully seated.
47. Then install throttle lever seal over the shaft, and install the washer and "E" clip as shown in Figure 112.
48. Lubricate the manual lever with light coat of Trans-Jel.
49. Verify again that the throttle lever is aligned with end of kickdown valve stem, and that manual lever arm is engaged in manual valve (See Figure 111).

Continued on Page 64.

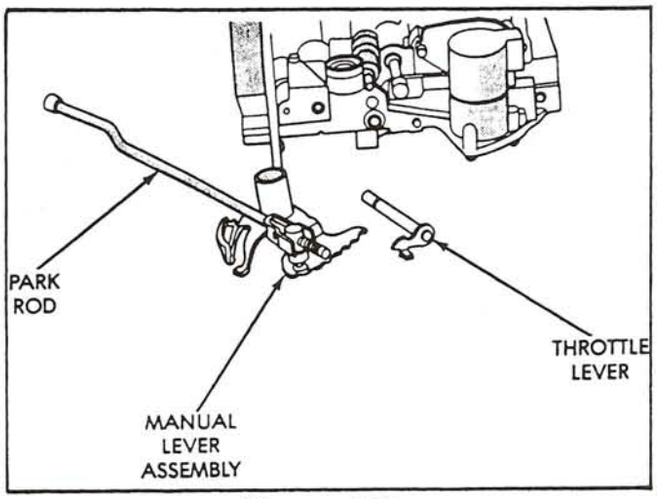

Figure 110

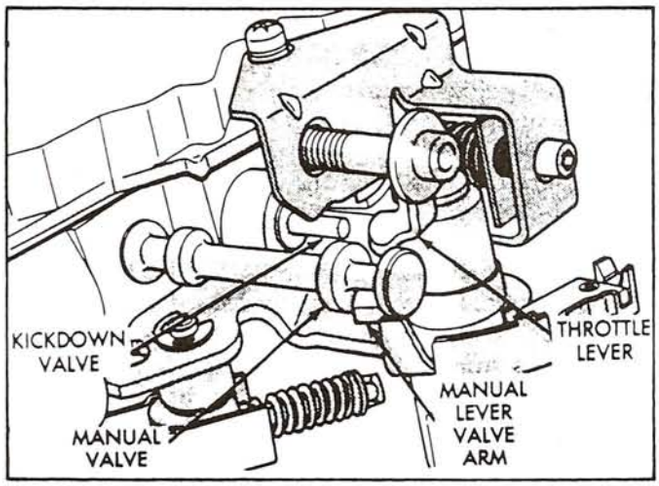

Figure 111

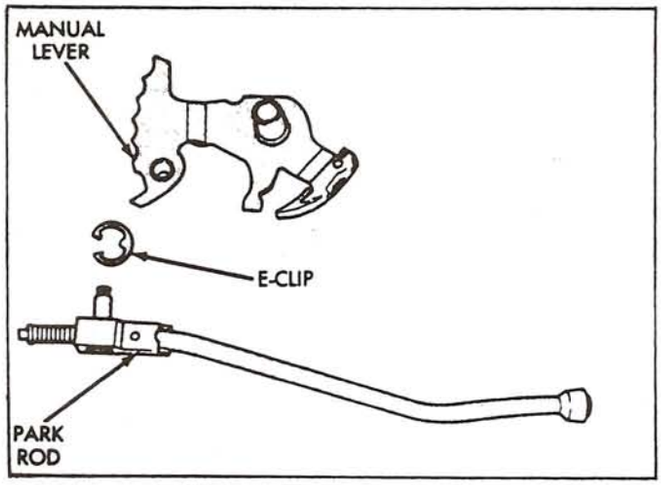

Figure 109A

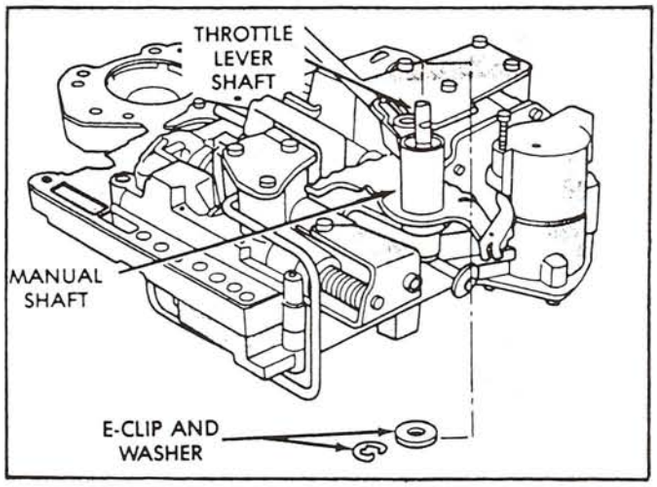

Figure 112

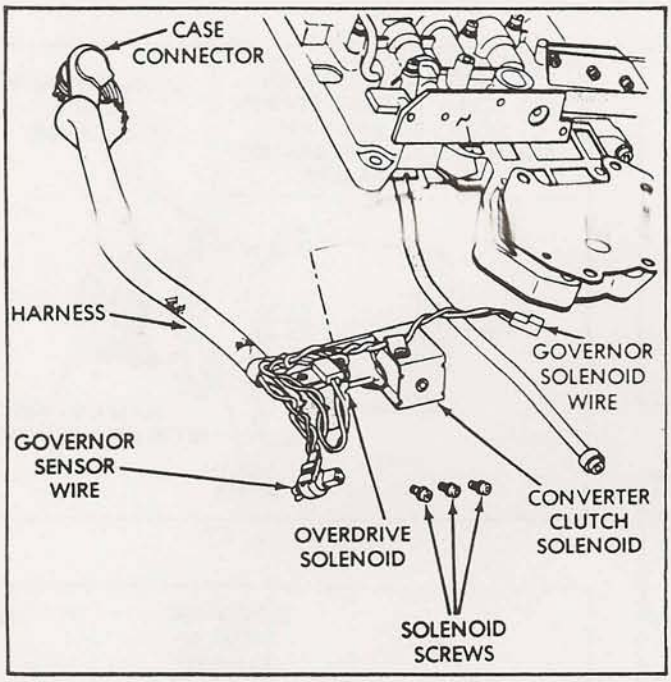

Figure 113

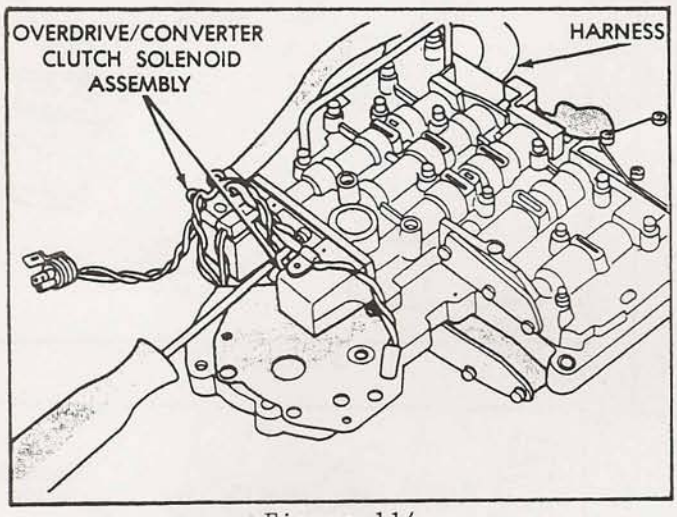

Figure 114

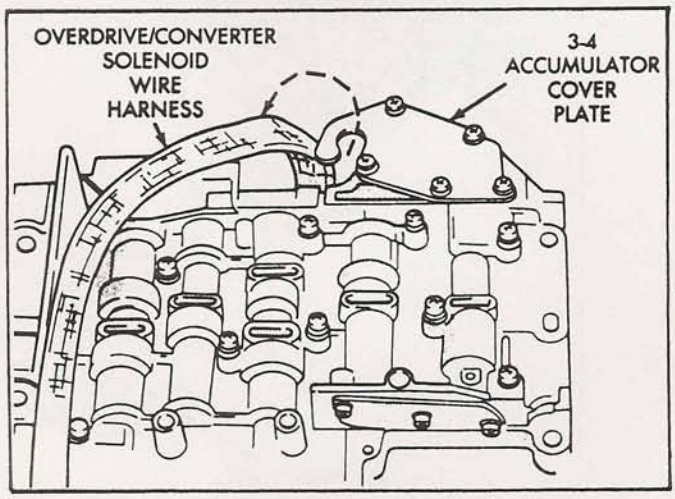

Figure 115

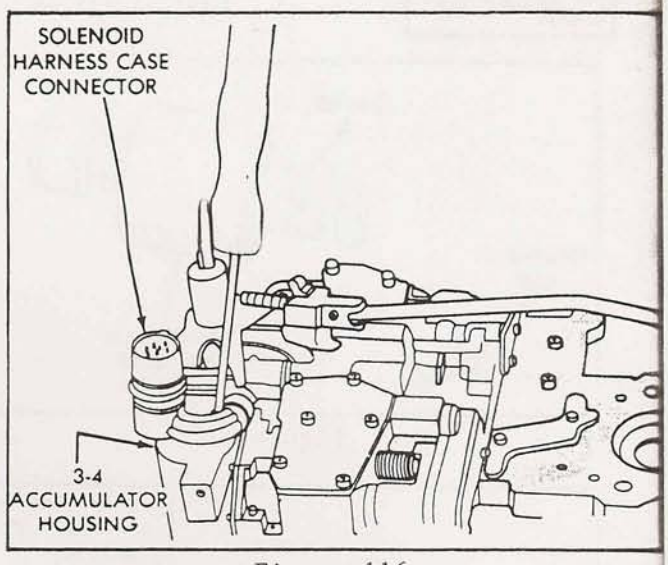

Figure 116

50. Install Overdrive/Converter solenoid gasket on upper housing and retain with Trans-Jel (See Figure 113).
51. Install the solenoid and wiring harness assembly, and torque the 3 retaining screws to 72 in.lbs (See Figure 114).
52. Route the wire harness, as shown in Figure 115, and hook into the 3-4 accumulator cover plate.
53. Attach the solenoid case connector to 3-4 accumulator housing with shoulder type screw (See Figure 116).
54. Case connector has small locating tang that fits into dimple at the top of 3-4 accumulator housing. Seat the tang in dimple before tightening screw.
55. Verify that wire harness is properly routed. Harness must be clear of the manual lever and park rod.
56. Install new "O" ring on the governor pressure sensor, and lubricate with a small amount of Trans-Jel, as shown in Figure 117.
57. Install governor pressure sensor into the governor body with twisting motion and install the retaining clip, shown in Figure 118.
58. Install new "O" rings on the governor pressure solenoid, and lubricate with small amount of Trans-Jel, as shown in Figure 119.
59. Install governor pressure solenoid in the governor body with twisting motion as shown in Figure 120.
60. Install gasket, governor body assembly, and retainer plate on transfer plate, as shown in Figure 121.

Continued on Page 66.

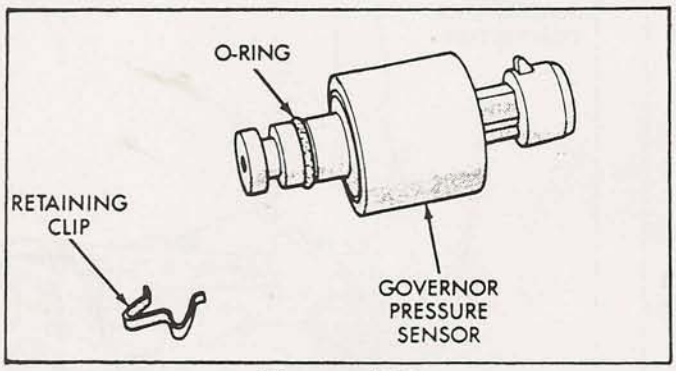

Figure 117

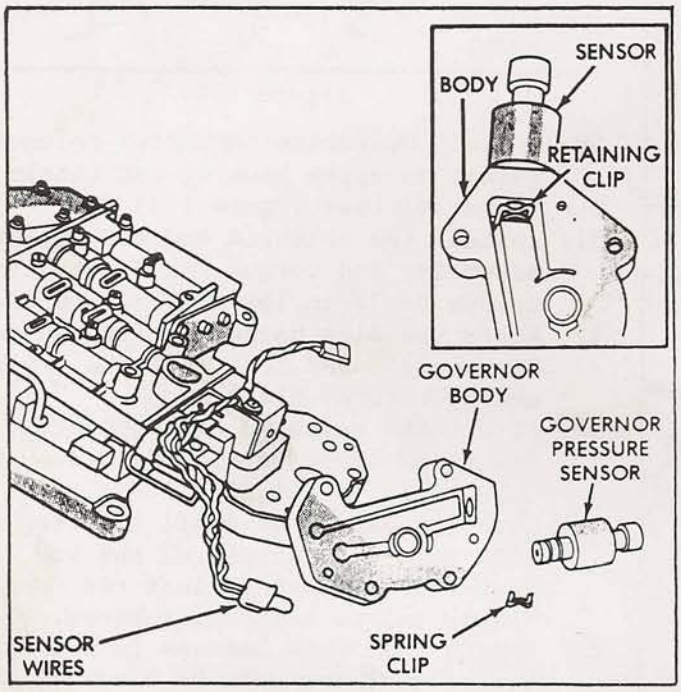

Figure 118

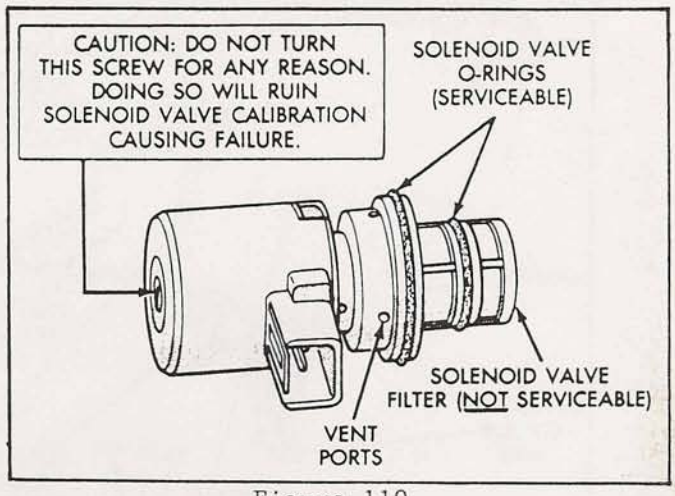

Figure 119

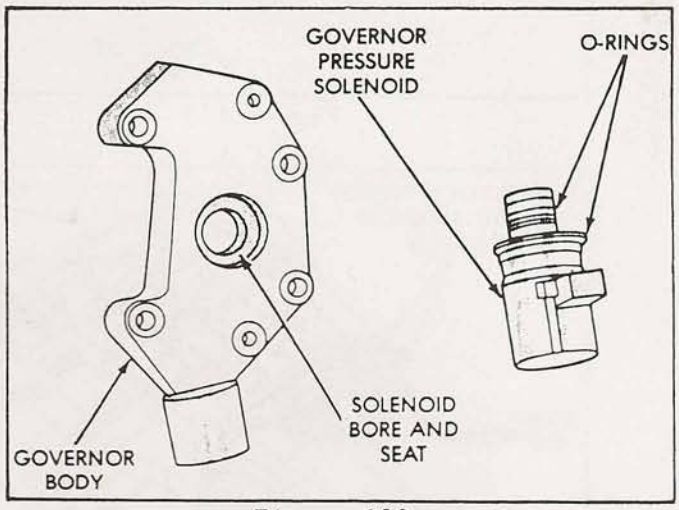

Figure 120

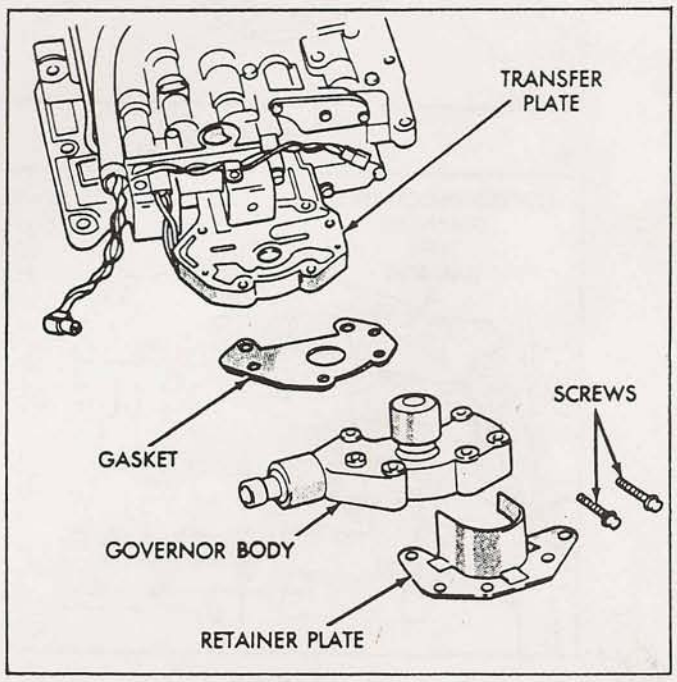

Figure 121

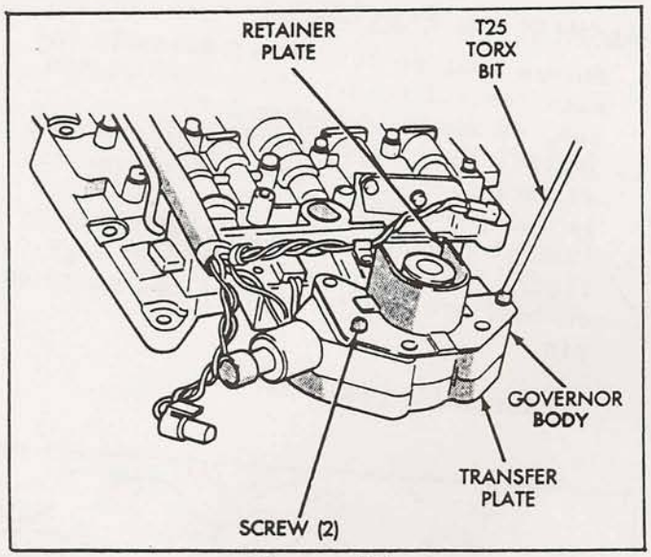

Figure 122

61. Align the screw holes in the governor body, gasket, and transfer plate, and install the two retaining screws, as shown in Figure 122.
62. Torque the two governor body screws to 35 in.lbs. (See Figure 122).
63. Connect the wire harness to governor pressure solenoid, using care so as not to bend the terminals. Refer to Figure 123.
64. Connect the wire harness to governor pressure sensor, using care so as not to bend the terminals (Figure 123).
65. The Ohms readings for all electrical components is found on Page 13.
66. The valve body is now ready for the final line pressure and throttle pressure adjustment checks, and can then be set aside for final assembly.

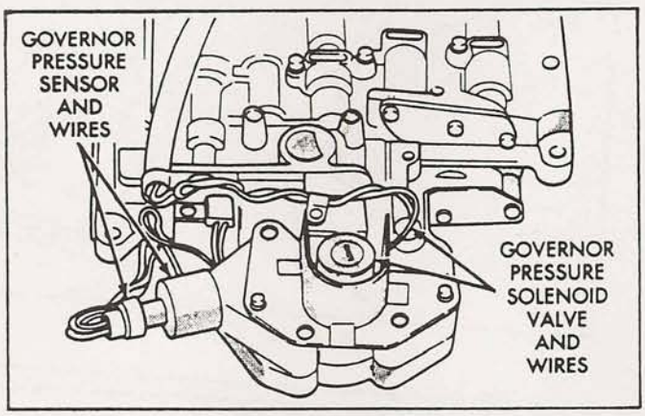

Figure 123

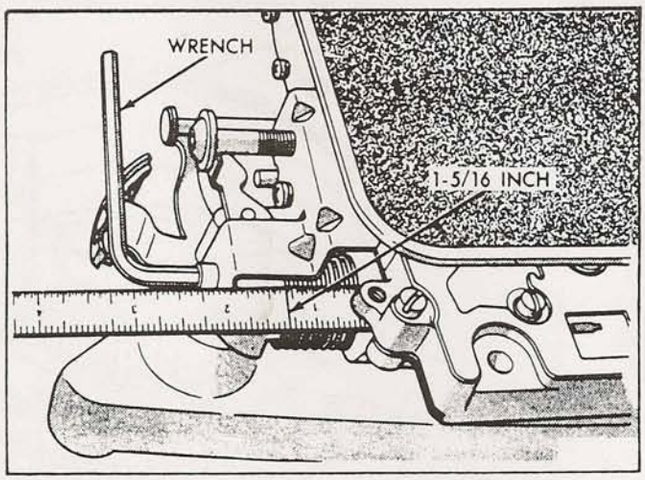

Figure 124

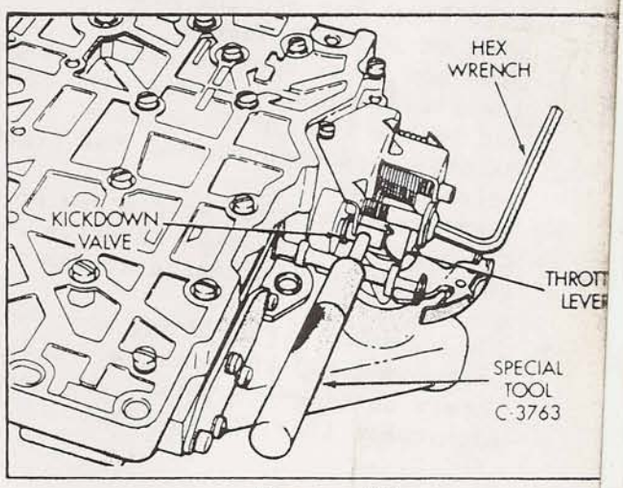

Figure 125

VALVE BODY CONTROL PRESSURE ADJUSTMENTS

There are two control pressure adjustments on the valve body which are, line pressure and throttle pressure.

Line and throttle pressure work together, as each affects shift quality and timing. Both adjustments must be performed properly and in the correct sequence. Line pressure is adjusted first and throttle pressure is adjusted last.

LINE PRESSURE ADJUSTMENT

1. Measure distance from the valve body to the inner edge of the adjusting screw with an accurate steel scale, as shown in Figure 124.
2. Distance should be 1 and 5/16 inches.
3. If adjustment is required, turn adjusting screw in, or out, to obtain the desired setting.
4. The (1-5/16 inch) setting is approximate. Because of manufacturing tolerances, it may be necessary to vary from this demension to obtain desired pressures.
5. One complete turn of the adjusting screw changes line pressure approximately 2 PSI. Turning the adjusting screw in counterclockwise direction increases pressure, and clockwise will decrease pressure.

THROTTLE PRESSURE ADJUSTMENT

1. Insert gauge C-3763 between the throttle lever cam and the kickdown valve stem as shown in Figure 125.
2. Push the gauge tool inward to compress the kickdown valve against the spring and bottom the throttle valve.
3. Maintain pressure against the kickdown valve spring.
4. Turn throttle lever stop screw until the screw head touches throttle lever tang and the throttle lever cam touchs gauge tool.
5. The kickdown valve spring must be fully compressed and the kickdown valve completely bottomed to obtain the correct adjustment (See Figure 125).

TRANSMISSION REASSEMBLY

1. Ensure that roller clutch assembly has been installed into the roller clutch cam, as shown in Figure 127.
2. Install rear band reaction pin in case as shown in Figure 126, and ensure it is fully seated.
3. Install rear band in case, as shown in Figure 127, and ensure the twin lugs on band are seated against the reaction pin.

Continued on Page 68.

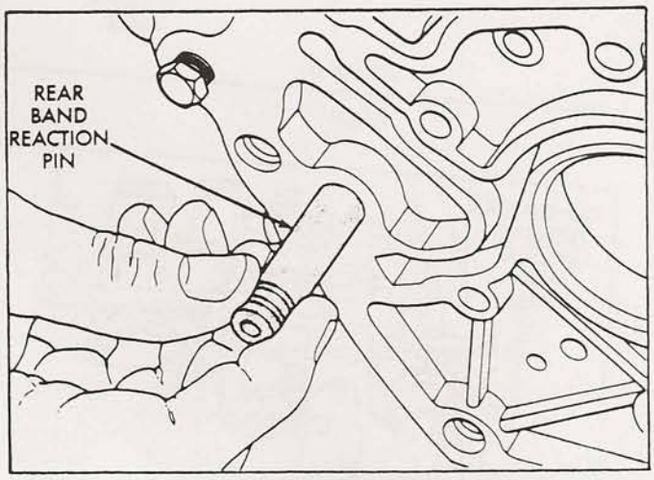

Figure 126

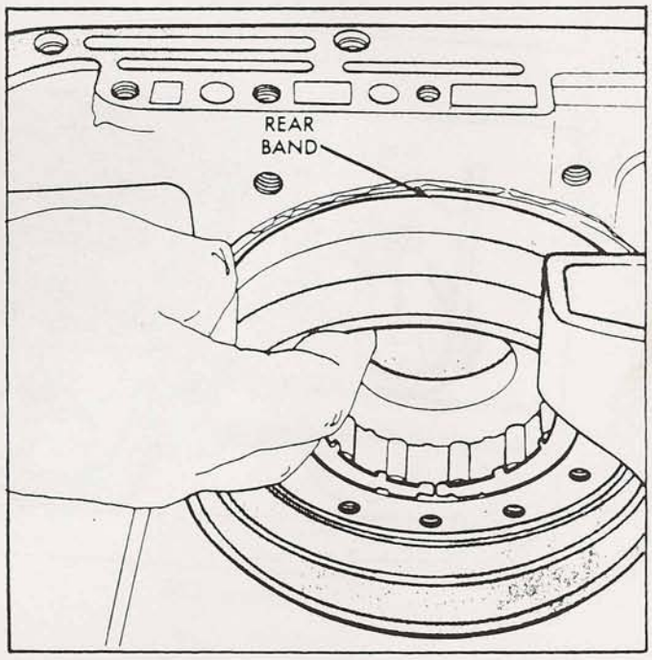

Figure 127

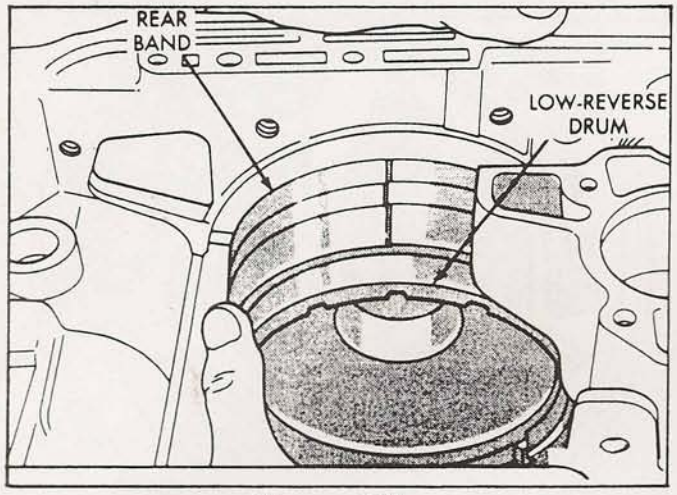

Figure 128

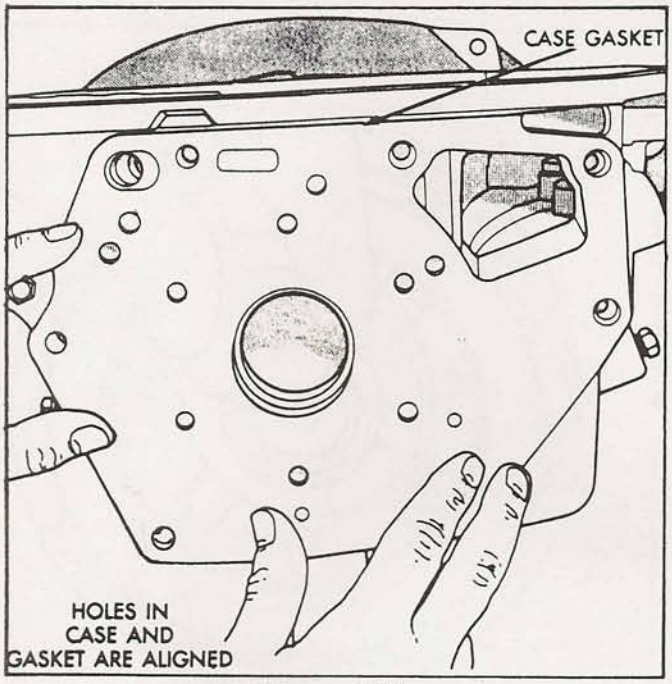

Figure 129

4. Lubricate overrunning clutch race that is on the low/reverse drum, with small amount of transmission fluid.
5. Install the low/reverse drum through the band, use slight pressure rearward and turn it in clockwise direction until drum seats in overrunning clutch. (See Figure 128).
6. Turn the low/reverse drum back and forth. Drum should rotate freely in clock wise direction, and lock when rotated counterclockwise direction (As viewed from front of case).
7. Install new gasket on rear of the case, as shown in Figure 129, and retain with small amount of Trans-Jel.

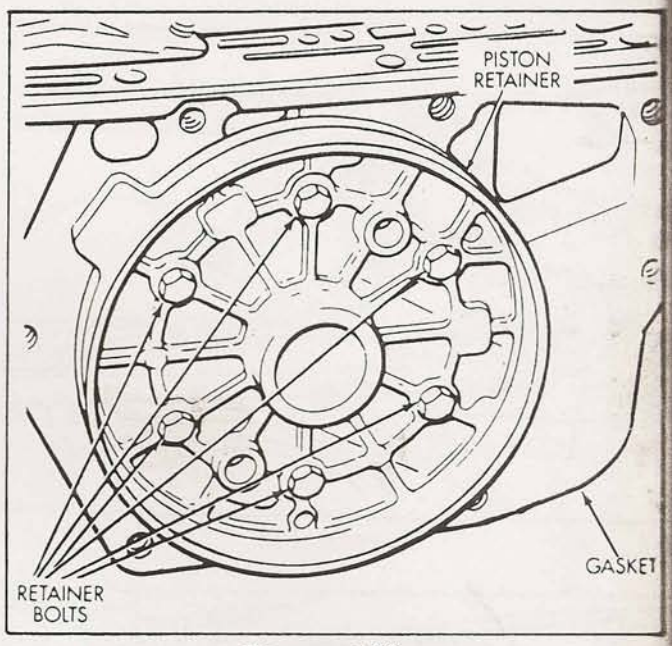

Figure 130

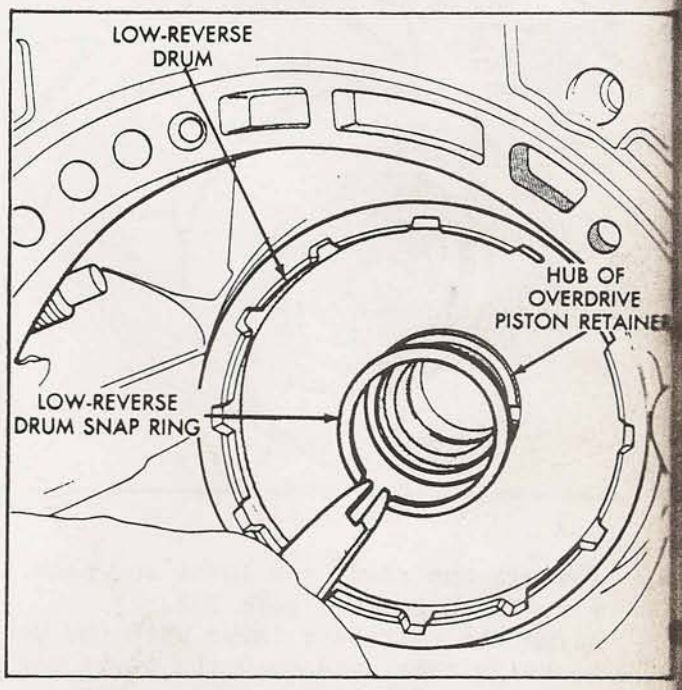

Figure 131

8. Ensure holes in the new gasket align with the holes in case (Figure 129).
9. Install the overdrive retainer through case and align bolt holes in retainer, gasket, and case (See Figure 130).
10. Install the six O/D retainer bolts in case, as shown in Figure 130.
11. Torque the retaining bolts to 13 ft.lb.
12. Install the snap ring that holds the low/reverse drum to the hub of the O.D. retainer (See Figure 131).

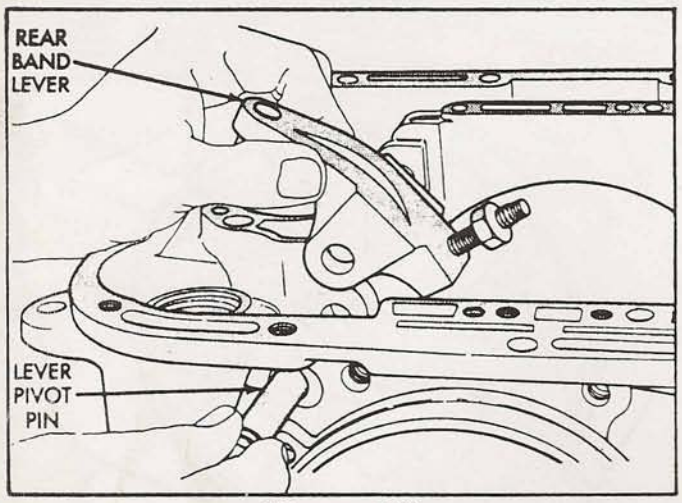

Figure 132

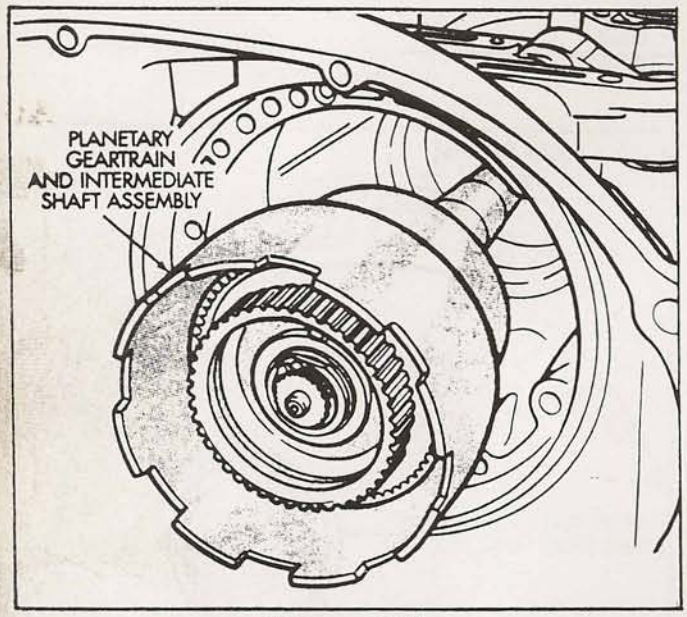

Figure 133

13. Install the rear band lever and pivot pin, as shown in Figure 132.
14. Align the rear band lever with the pin bores in case, and push the pivot pin into place (See Figure 132).
15. Install the preassembled planetary geartrain assembly into the case using both hands, until it is fully seated (See Figure 133).
16. Ensure that the thrust plate is still in place on intermediate shaft, shown in Figure 134. Retain with Trans-Jel.

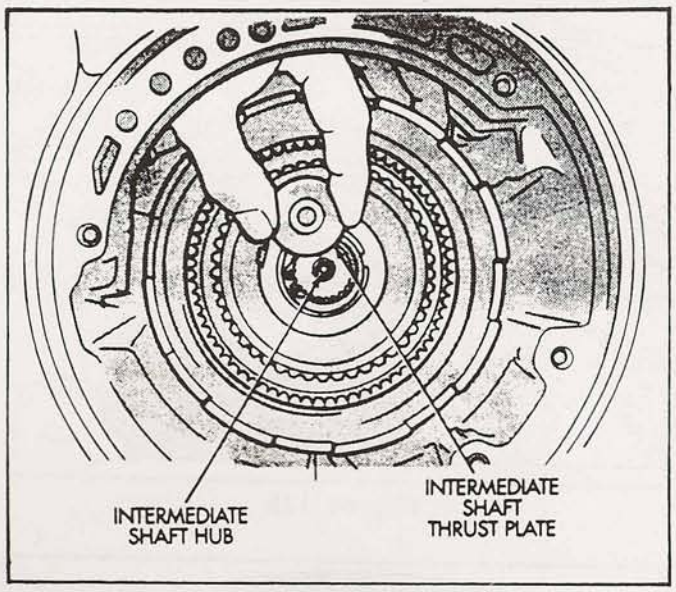

Figure 134

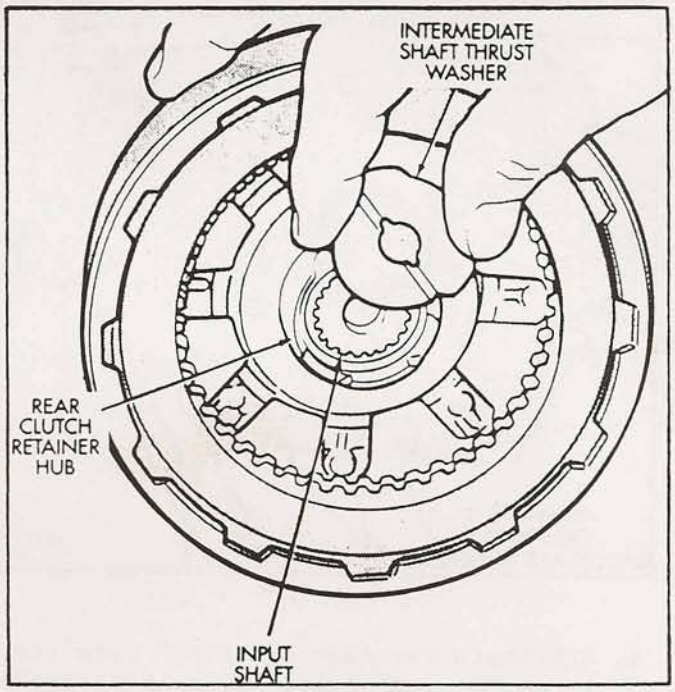

Figure 135

17. Ensure that the selective thrust washer is in place on the rear clutch drum as shown in Figure 135.
18. Be sure grooved side of the washer is facing out (toward output shaft), as shown in Figure 135. Also note that washer only fits one way into the rear clutch hub (See Figure 135).

Continued on Page 70.

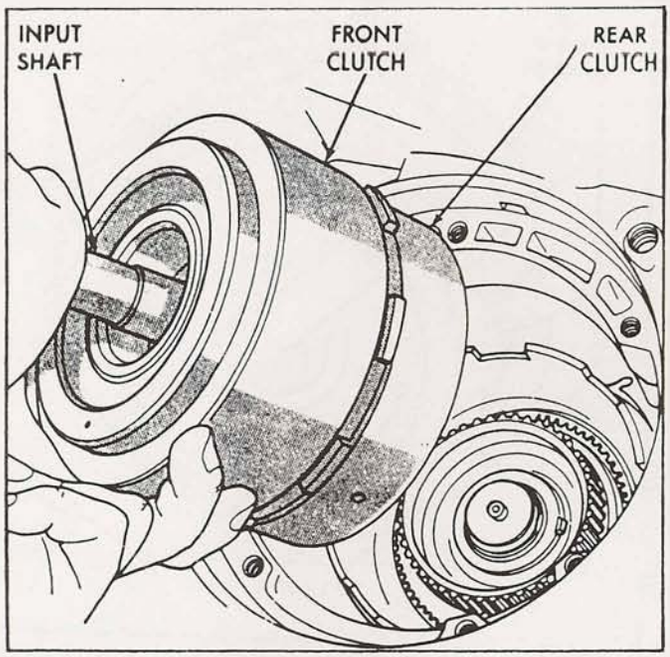

Figure 136

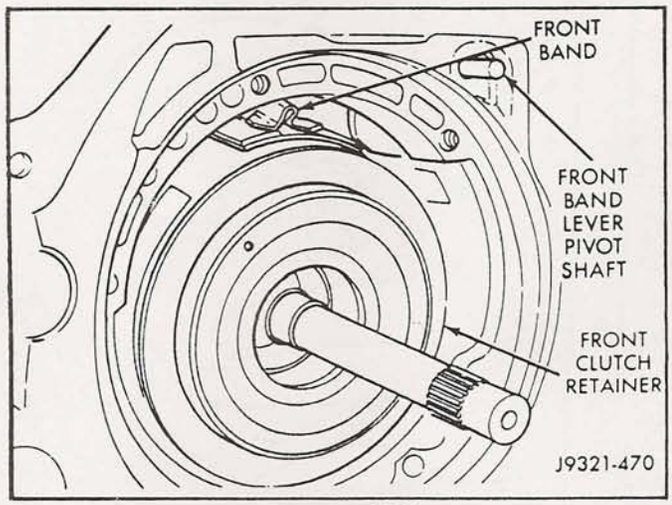

Figure 137

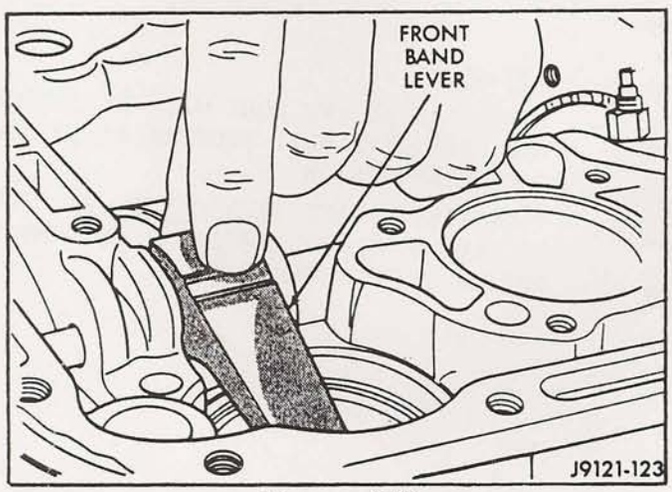

Figure 138

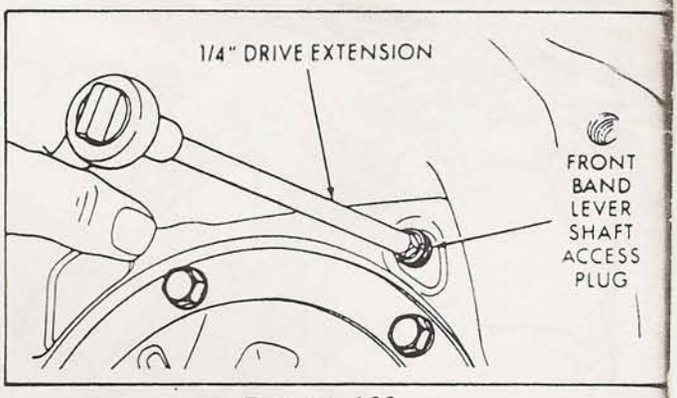

Figure 139

19. From this point, it will be best if we have the transmission standing upright. We recommend using an old 904 "Baby 8" case with bell housing facing floor. Your transmission can now be stood up on the old case with intermediate shaft going through the old case.
20. Install the preassembled front and rear clutch housing assembly into the case, as shown in Figure 136.
21. Carefully twist assembled clutches back and forth to engage and seat the rear clutches on front ring gear hub. Also be sure front clutch housing drive lugs are fully engaged in the slots of the driving shell after installation.
22. Slide the front band over front clutch housing as shown in Figure 137.
23. Install the front band lever pivot shaft part way into the case, as shown in Figure 137.
24. Align the front band lever with bores in the case and push pivot shaft all the way into the case(See Figure 138).
25. Install the front band strut, as shown in Figure 140.
26. Verify that both clutch drums are still seated in transmission properly.
27. Coat the front band pivot pin access plug with sealer, and install plug in converter housing (See Figure 139).
28. Tighten front band adjusting screw, so that front band just grips the front clutch housing.
29. Check the sealing rings on preassembled front pump assembly (See Figure 141).
30. Verify that seal rings are hooked together and that thrust washer is properly positioned. Retain thrust washer with Trans-Jel.
31. This washer inside diameter bore is chamfered on one side, and chamfered side goes toward the front.

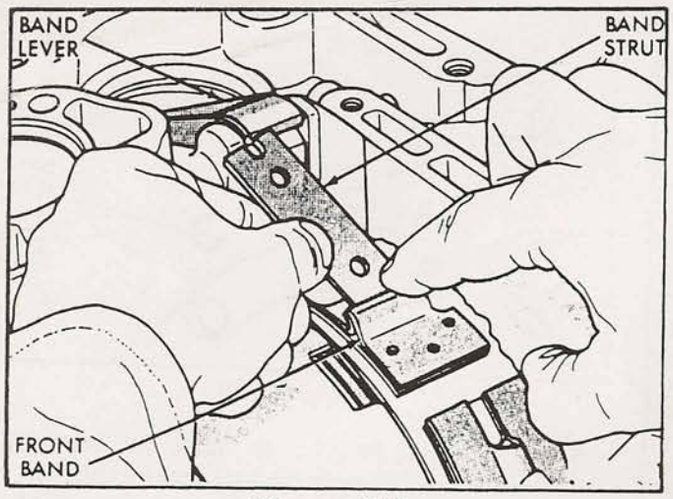

Figure 140

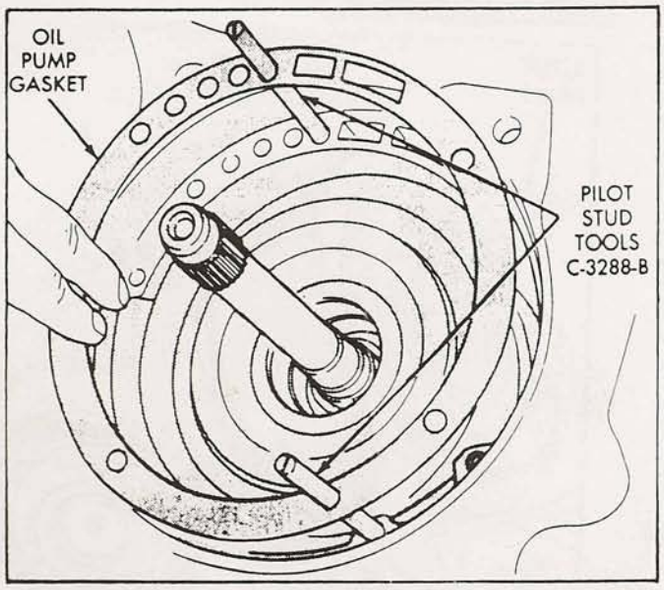

Figure 142

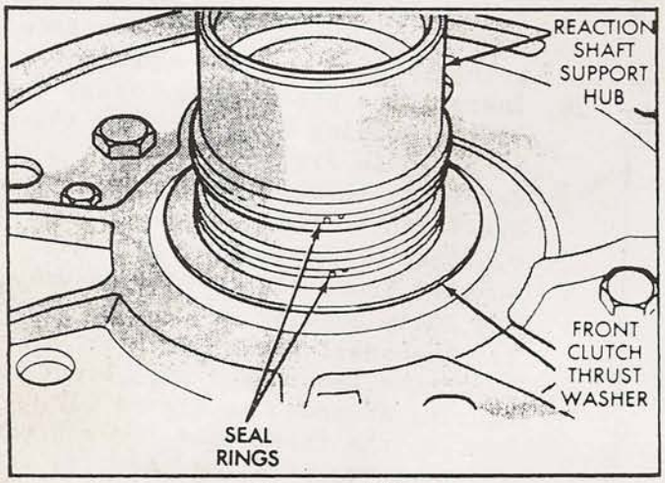

Figure 141

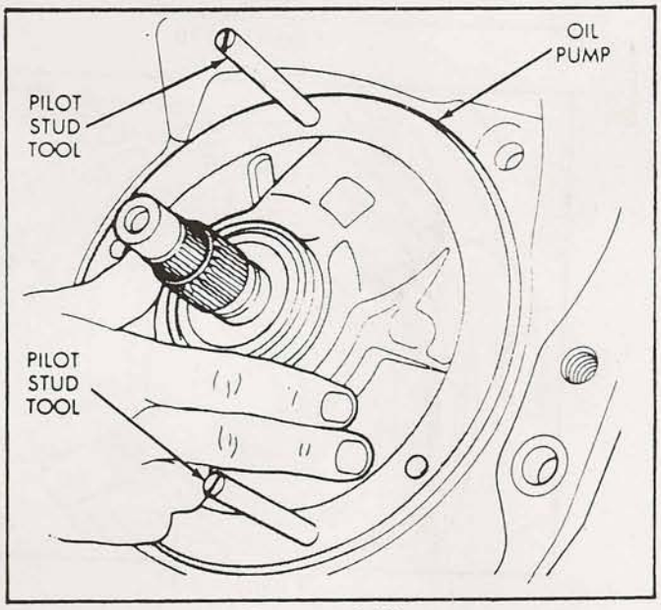

Figure 143

32. Install two threaded pilot studs into the case, as shown in Figure 142.
33. Align and install a new front oil pump gasket over the pilot studs, as shown in Figure 142.
34. Lubricate the front pump bore in case with Trans-Jel to ease installation.
35. Lubricate the front oil pump "O" ring with Trans-Jel to ease installation.
36. Align and install front oil pump over the pilot studs and into the case, as shown in Figure 143.
37. Install 2 or 3 pump bolts by hand and remove the pilot studs.
38. Install the remaining oil pump bolts and tighten alternating from one side to the other.
39. After pump is snug torque all of the oil pump bolts to 15 ft.lbs.

Continued on Page 72.

CAUTION:

TRANSMISSION END PLAY WILL BE CHECKED AFTER THE OVERDRIVE UNIT SECTION IS INSTALLED ON THE TRANSMISSION.

TRANSMISSION END PLAY CANNOT BE PROPERLY CHECKED WITH THE OVERDRIVE UNIT SECTION OFF OF THE TRANSMISSION.

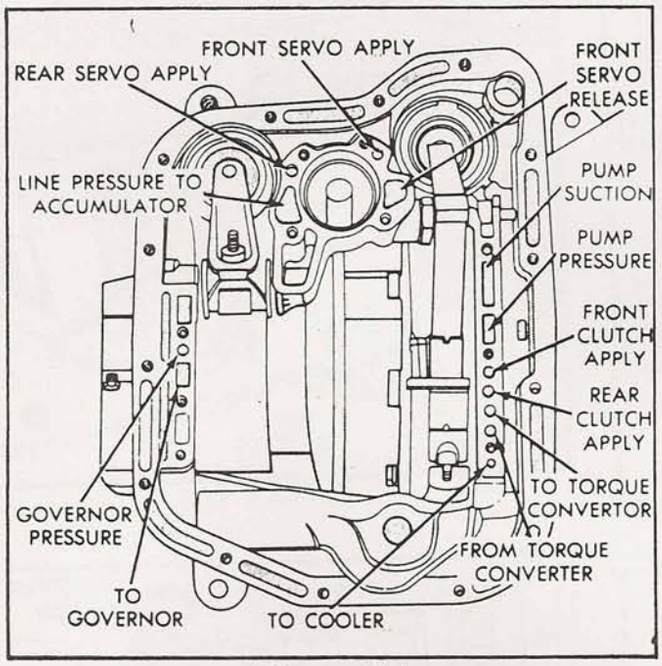

Figure 144

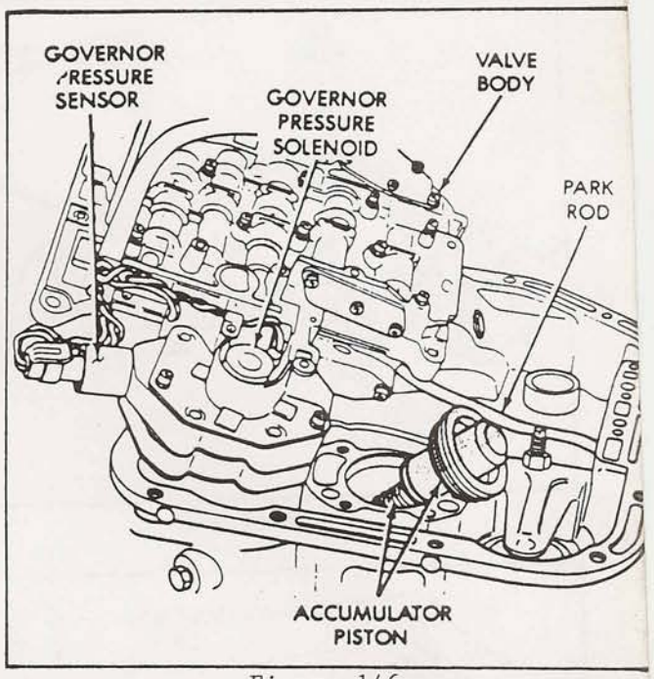

Figure 146

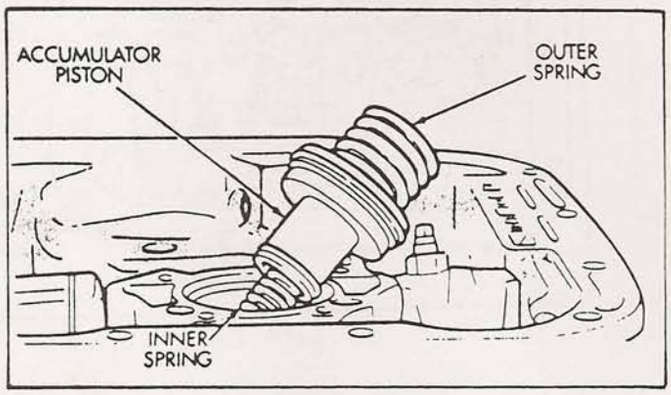

Figure 145

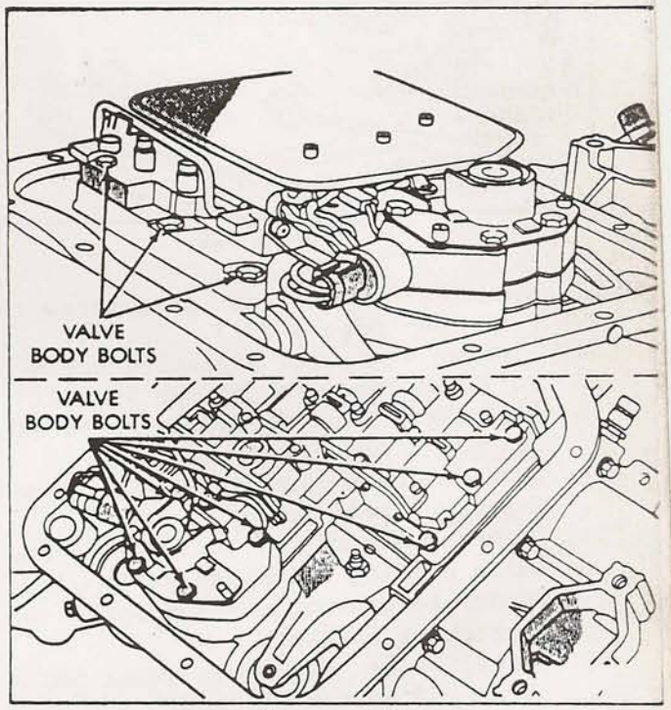

Figure 147

40. Perform air tests on the clutch packs, and the front and rear servos. The passages are identified in Figure 144.
41. Install accumulator piston, and inner and outer springs into the case, as shown in Figure 145.
42. Verify that Park/Neutral switch has not been installed in case. Valve body cannot be installed if switch is in case.
43. Verify that valve body wiring harness is secured in 3-4 accumulator cover plate.
44. Align and carefully insert parking rod in case as shown in Figure 146.
45. Align and seat valve body on case. Be sure manual lever shaft and case connector are fully seated in case. Also be sure wire harness is not pinched or kinked.
46. Install and start the 10 valve body bolts in locations shown in Figure 147.
47. Torque the ten valve body bolts down to 105 in.lbs. (See Figure 147).
48. Install a new oil filter on valve body and torque screws to 35 in.lbs, shown in Figure 148.
49. Install neutral safety switch as shown in Figure 149 and 150.

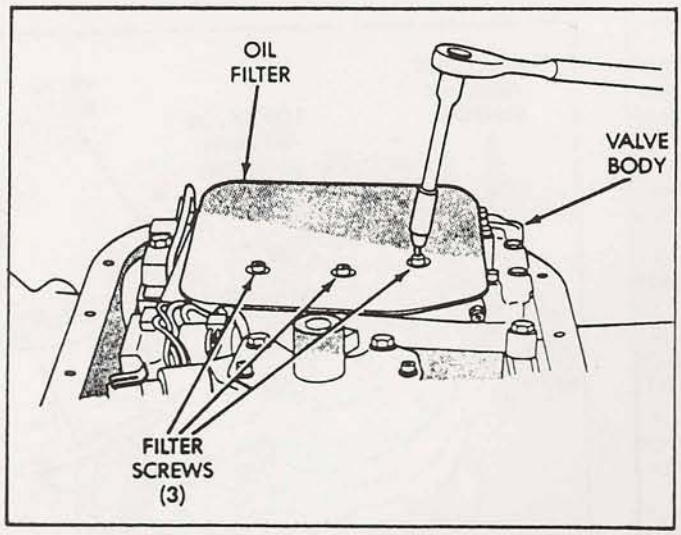

Figure 148

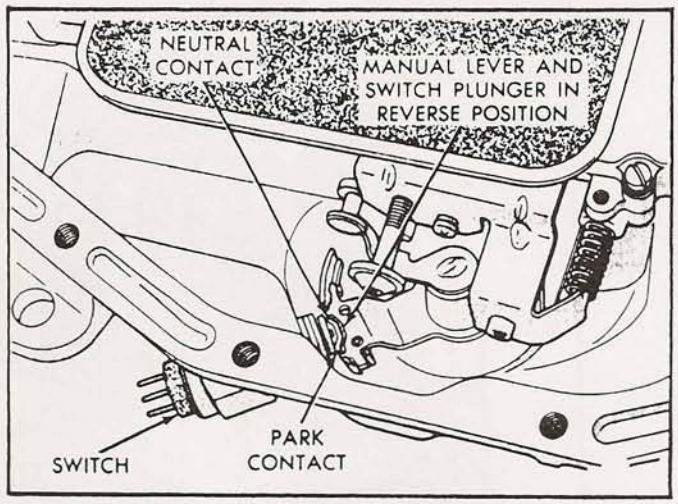

Figure 150

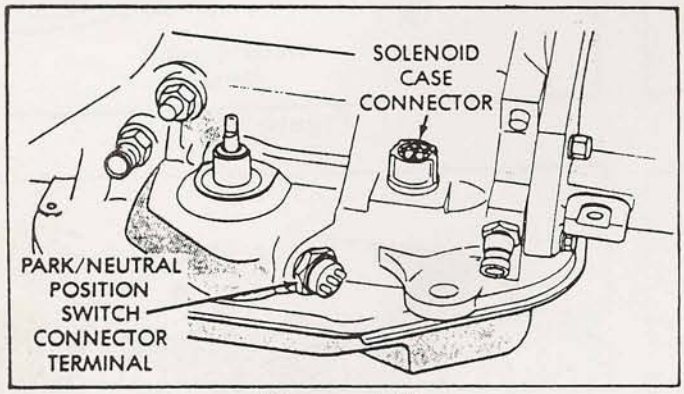

Figure 149

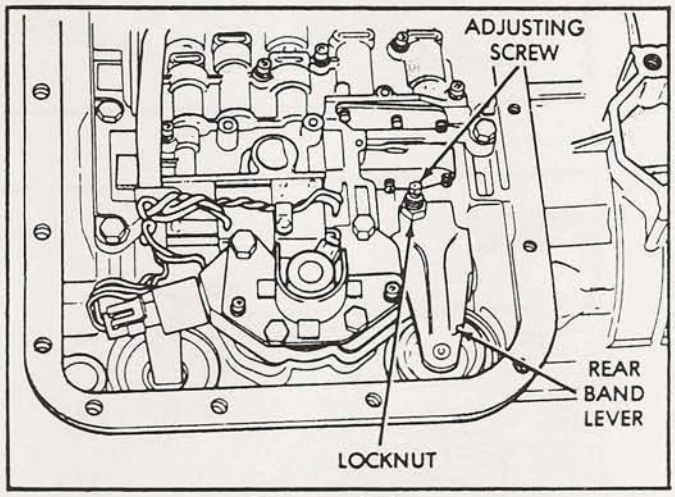

Figure 151

50. Loosen front and rear band screw locknuts (See Figure 151).
51. Tighten each band adjusting screw down to 72 in.lbs. with torque wrench.
52. Back FRONT band adjusting screw out, Exactly 3 and 5/8 turns.
53. Back the REAR band adjusting screw out, Exactly 4 full turns.
54. Tighten each adjusting screw locknut, while holding adjusting screw with a wrench to prevent turning while you are tightening locknut.
55. Install clean magnet on small tab at corner of bottom oil pan.
56. Install a new bottom pan gasket on the case, and install the bottom pan.
57. Torque the bottom pan bolts to 13 ft.lb.

Continued on Page 74.

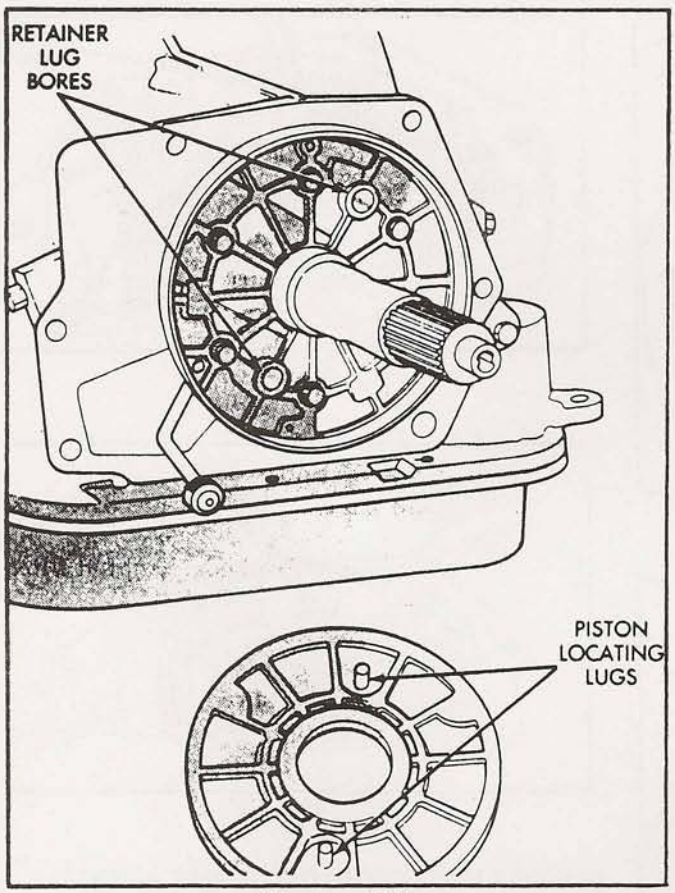

Figure 152

58. Install a new manual shaft seal in the case using a 15/16" socket, as shown in Figure 155.
59. Install new inner and outer lip seals on overdrive clutch piston, lubricate with a small amount of Trans-Jel.
60. Align locating lugs on piston with the locating bores in the retainer, shown in Figure 152.
61. Use wire lip seal installer and install overdrive piston into the retainer. (See Figure 153).
62. Install selective spacer on intermediate shaft (See Figure 153).
63. Install selective thrust plate on the overdrive piston and retain with a liberal amount of Trans-Jel, as shown in Figure 154.
64. Install thrust bearing on top of the selective thrust plate with the black side facing the piston, and retain with a liberal amount of Trans-Jel, as shown in Figure 154.
65. You are now ready to install the overdrive unit onto the transmission.

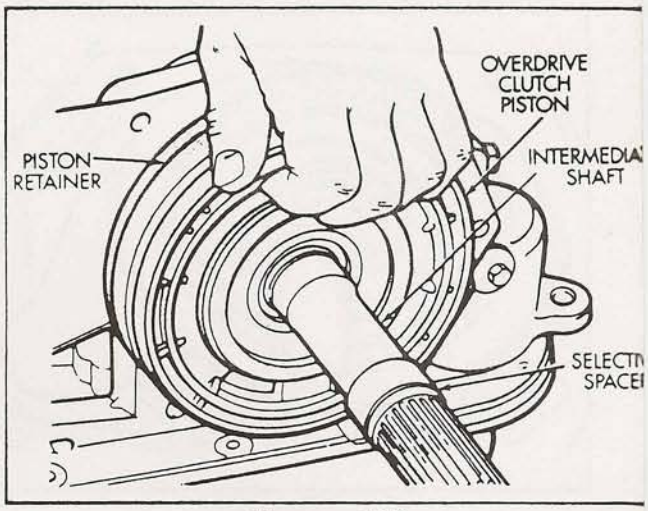

Figure 153

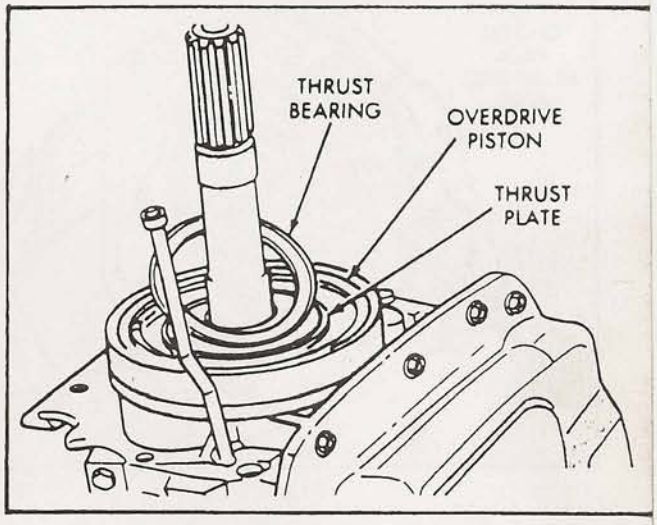

Figure 154

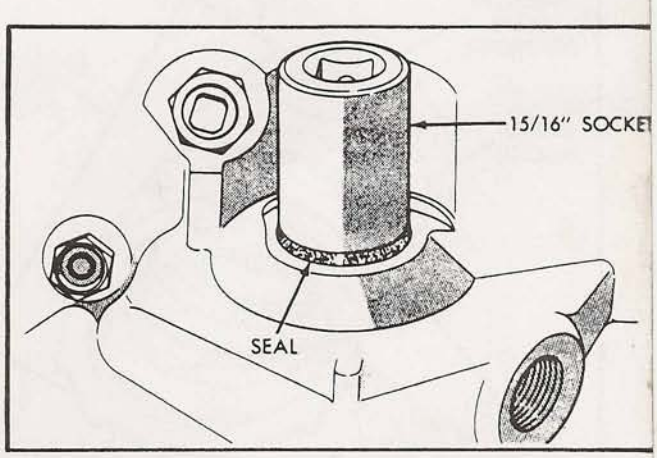

Figure 155

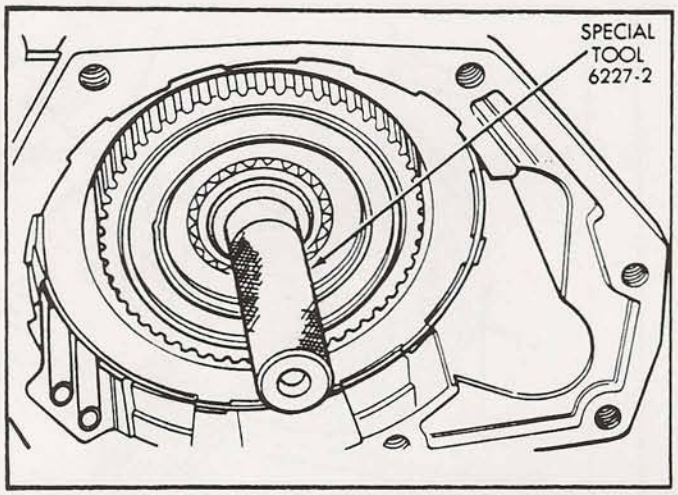

Figure 1

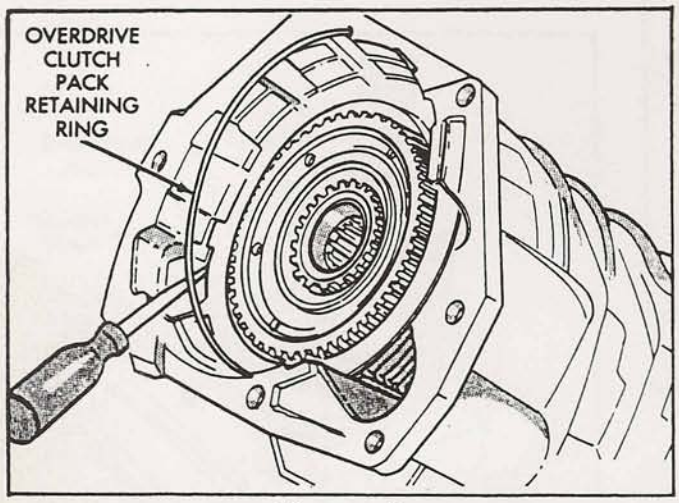

Figure 2

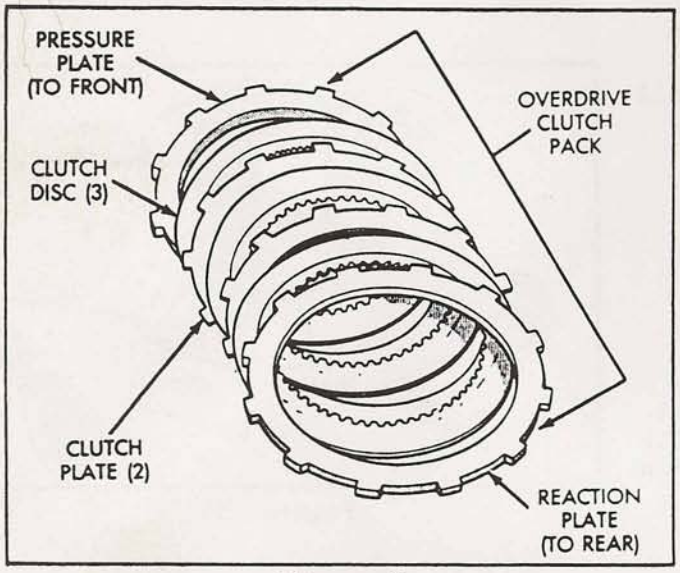

Figure 3

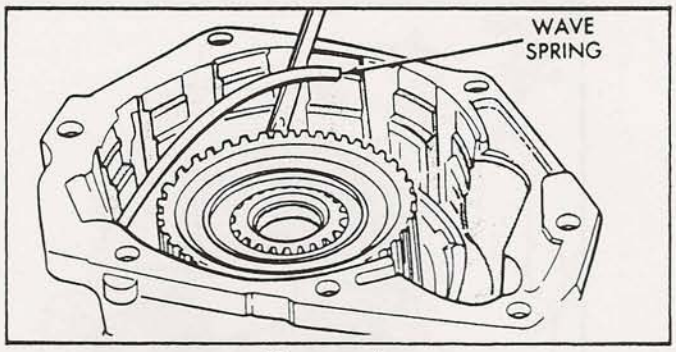

Figure 4

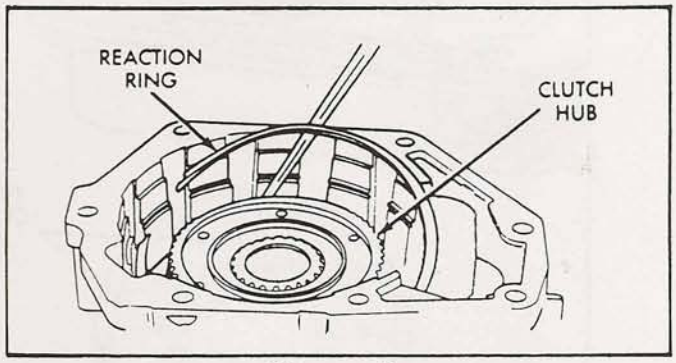

Figure 5

OVERDRIVE SECTION DISASSEMBLY

1. Remove the special tool for aligning the overrunning clutch and planetary gear splines, if it was previously installed (See Figure 1).
2. Remove the overdrive clutch pack wire snap ring. This snap ring is ROUND, as shown in Figure 2.
3. Remove the overdrive clutch pack and note position of clutch pack components as shown in Figure 3.
4. Remove the overdrive clutch WAVE snap ring, as shown in Figure 4.
5. Remove the overdrive clutch FLAT snap ring, as shown in Figure 5. Note that the FLAT snap ring is located in the same groove as the WAVE snap ring.
6. Keep record of these three snap rings, ROUND, WAVE, and FLAT snap rings, as putting thse in the wrong location is a very common mis-assembly problem.

Continued on Page 76.

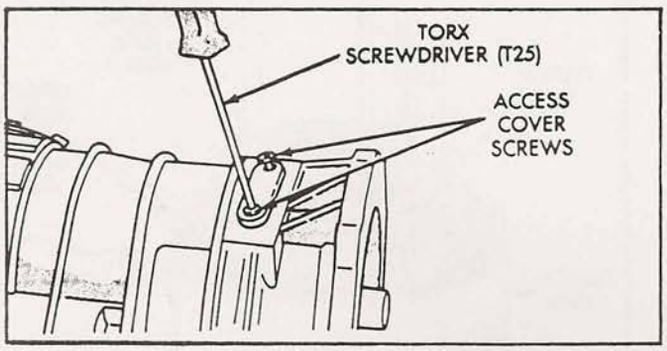

Figure 6

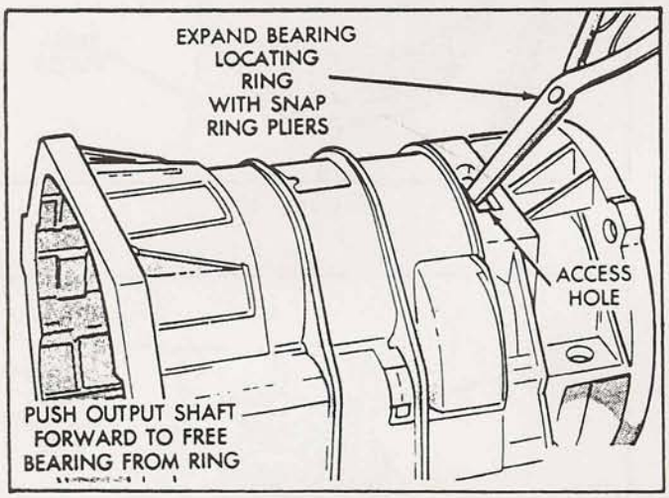

Figure 7

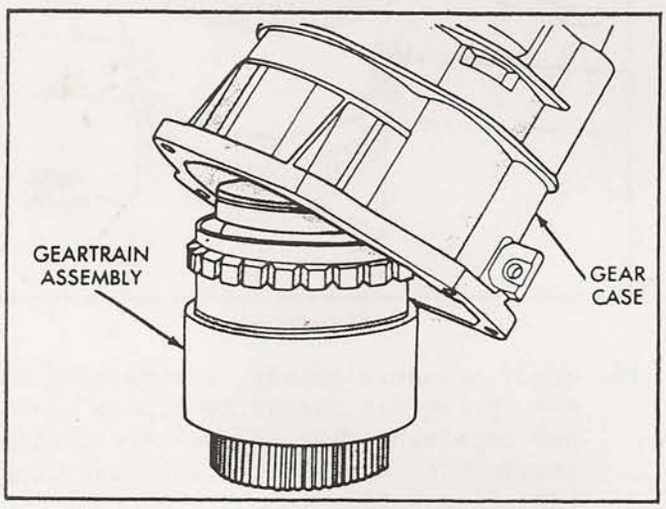

Figure 8

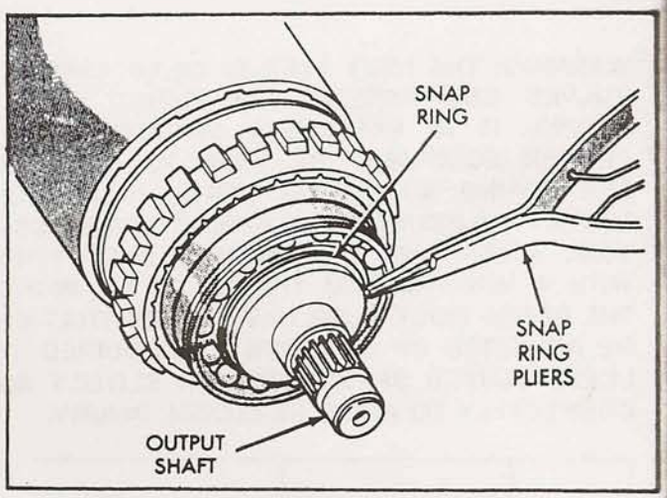

Figure 9

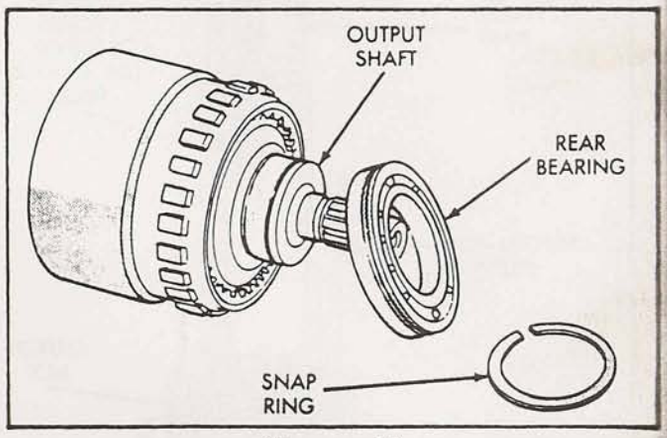

Figure 10

7. Remove the two Torx head screws that attach the access cover to overdrive case, as shown in Figure 6.
8. Remove the access cover and discard the gasket (See Figure 6).
9. Expand output shaft bearing snap ring with snap ring pliers, and push output shaft forward to release bearing from snap ring (See Figure 7).
10. Lift the overdrive case up and off of the geartrain assembly (See Figure 8).
11. Remove the snap ring that retains the rear bearing on output shaft, as shown in Figure 9.
12. Remove the rear ball bearing from the output shaft (See Figure 10).

READ THE WARNING ON PAGE 77.

WARNING: THE NEXT STEP IN DISASSEMBLY INVOLVES COMPRESSING THE DIRECT CLUTCH SPRING. IT IS EXTREMELY IMPORTANT THAT PROPER EQUIPMENT BE USED TO COMPRESS THE SPRING AS SPRING FORCE IS APPROXIMATELY 830 POUNDS. USE SPRING COMPRESSOR TOOL 6227-1 AND A HYDRAULIC SHOP PRESS WITH A MINIMUM RAM TRAVEL OF 5-6 INCHES. THE PRESS MUST ALSO HAVE A BED THAT CAN BE ADJUSTED UP OR DOWN AS REQUIRED. RELEASE CLUTCH SPRING TENSION SLOWLY AND COMPLETELY TO AVOID PERSONAL INJURY.

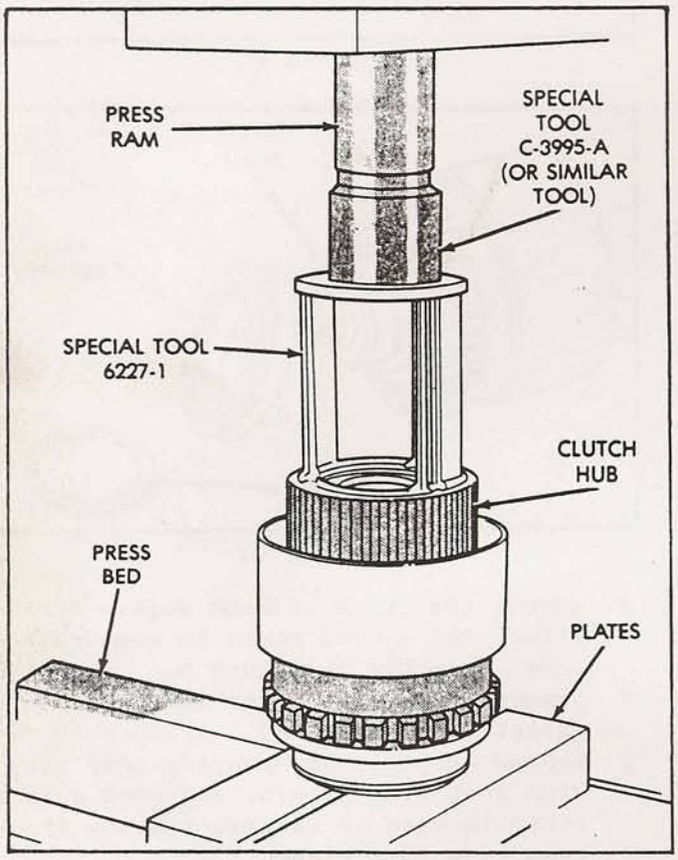

Figure 11

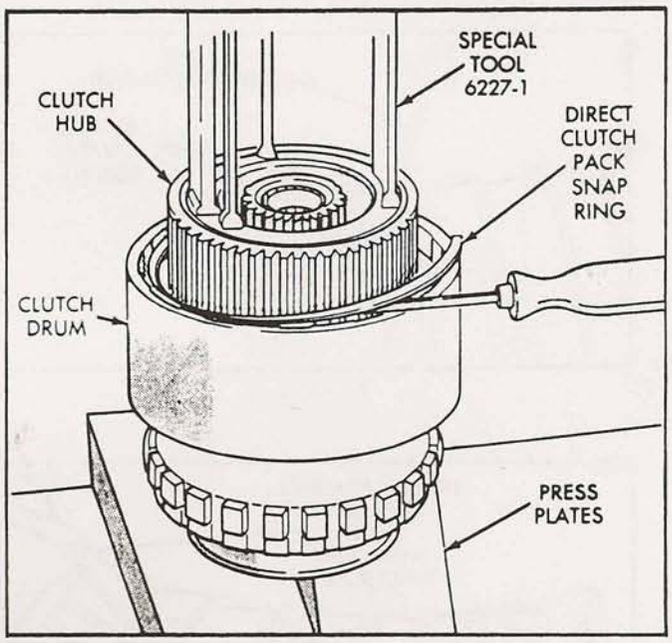

Figure 12

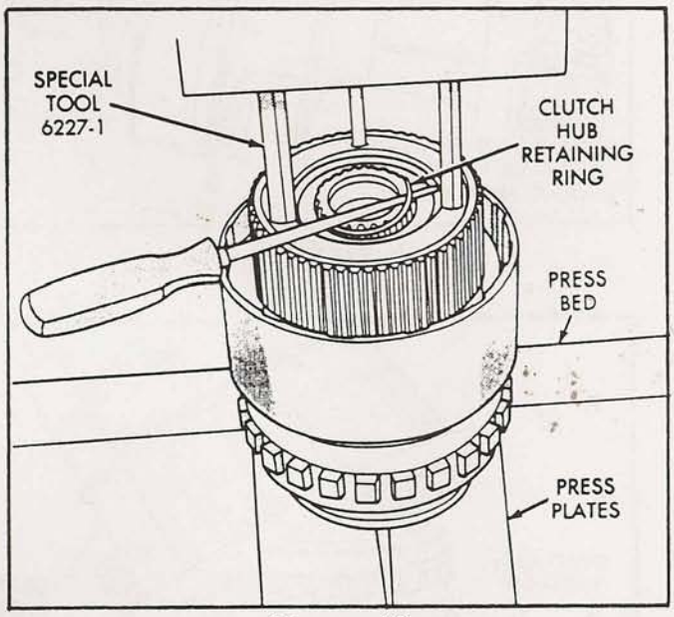

Figure 13

13. Mount the geartrain assembly in a shop press, as shown in Figure 11.
14. Position Compressor Tool 6227-1 on the clutch hub, as shown in Figure 11. Support output shaft flange with steel press plates as shown in Figure 11 and center assembly under press ram.
15. Use Special Tool C-3995-A, or a similar size tool, at top of 6227-1 to help distribute load and provide the needed extra press length (See Figure 11).
16. Apply pressure slowly, compressing hub and spring far enough to expose clutch hub retaining ring and relieve spring pressure on the clutch pack snap ring. (See Figure 12).
17. Remove the direct clutch pack snap ring as shown in Figure 12.
18. Remove the direct clutch hub retaining ring, as shown in Figure 13.
19. Release the press load slowly and completely.

Continued on Page 78.

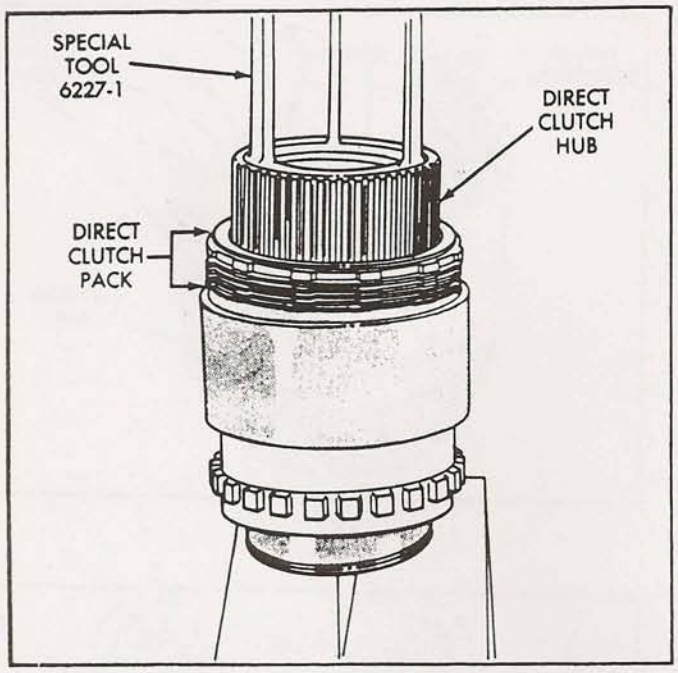

Figure 14

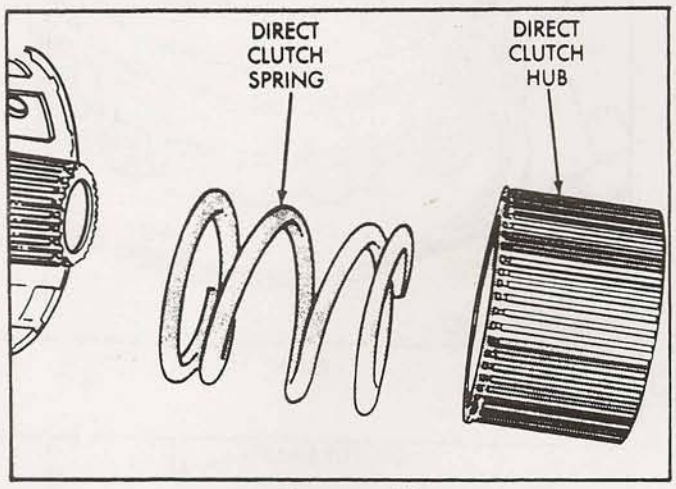

Figure 15

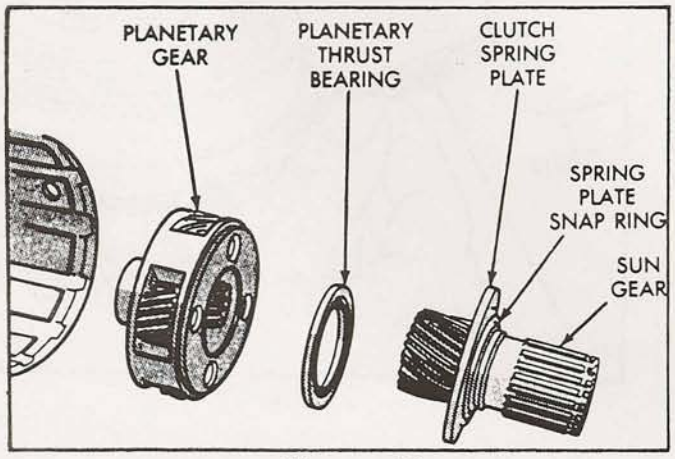

Figure 16

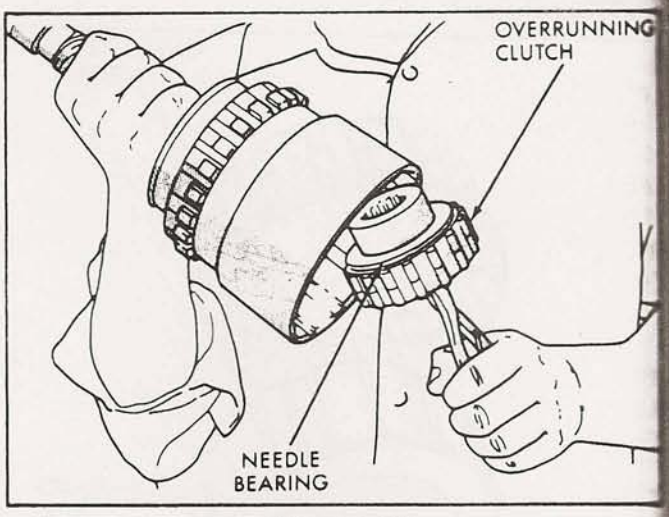

Figure 17

20. After the press is fully released, remove the Special Tool 6227-1, as shown in Figure 14.
21. Remove the direct clutch pack complete (See Figure 14).
22. Remove the direct clutch hub and spring as shown in Figure 15.
23. Remove sun gear, planetary thrust bearing, and overdrive carrier, as shown in Figure 16.
24. Remove the overrunning clutch assembly with snap ring pliers, as shown Figure 17. Remove clutch with counterclockwise twisting motion (See Figure 17).
25. Remove overrunning clutch from clutch hub, as shown in Figure 18.
26. Mark position of annulus gear and direct clutch drum for assembly alignment reference, as shown in Figure 19, with a small center punch or scribe.
27. Remove the direct clutch drum inner retaining ring (See Figure 20).
28. Turn the assembly over and remove the direct clutch outer retaining ring, as shown in Figure 21.
29. Mark position of annulus gear and the output shaft for assembly alignment reference, as shown in Figure 22, with a small center punch or scribe.

Continued on Page 80.

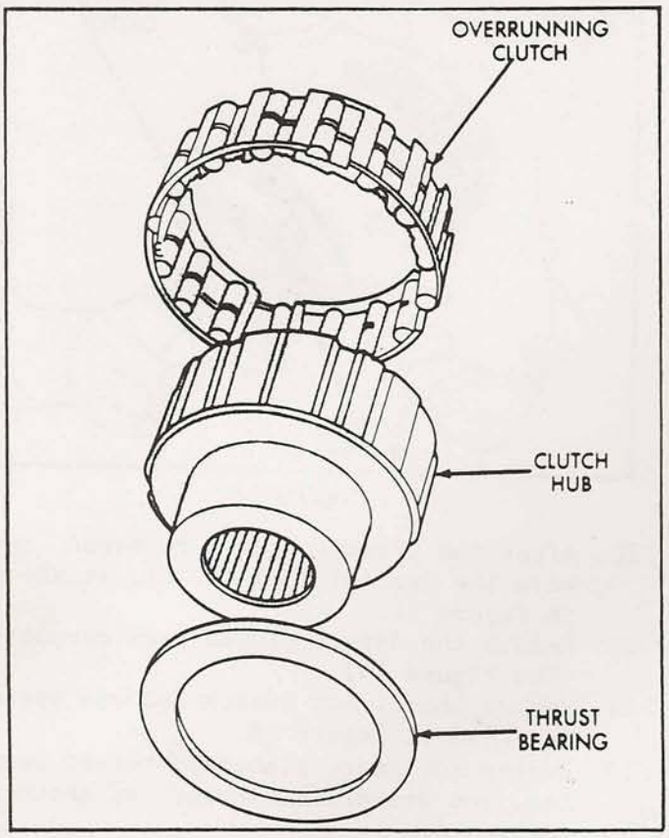

Figure 18

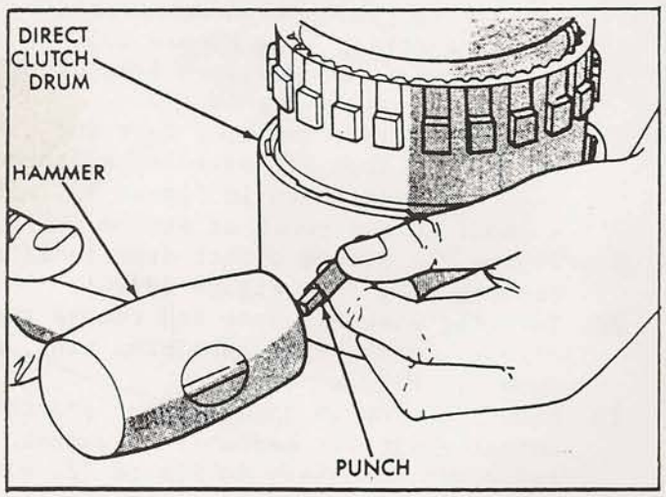

Figure 19

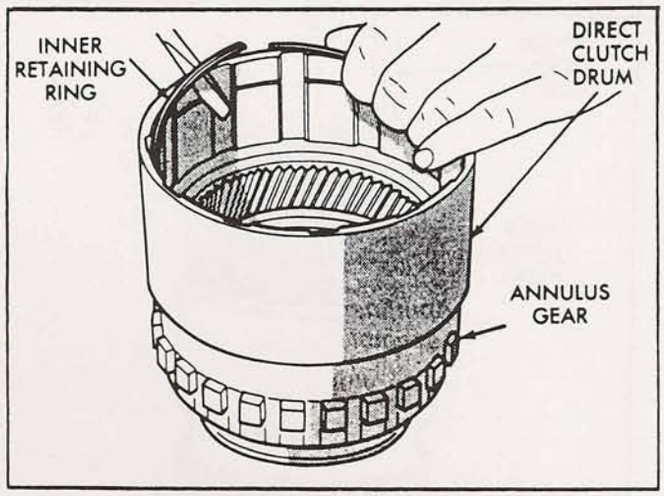

Figure 20

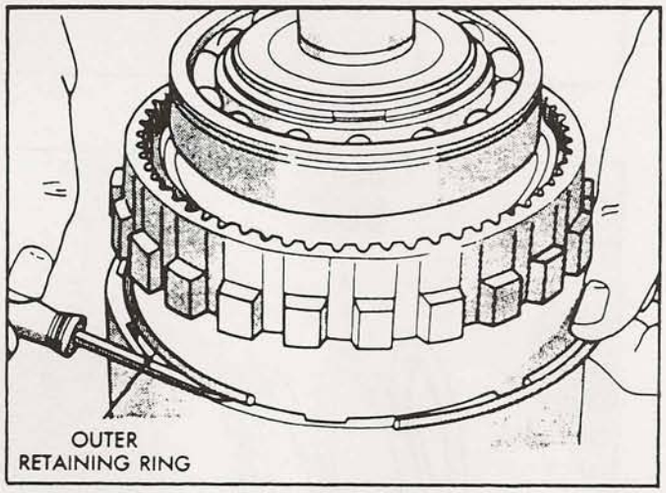

Figure 21

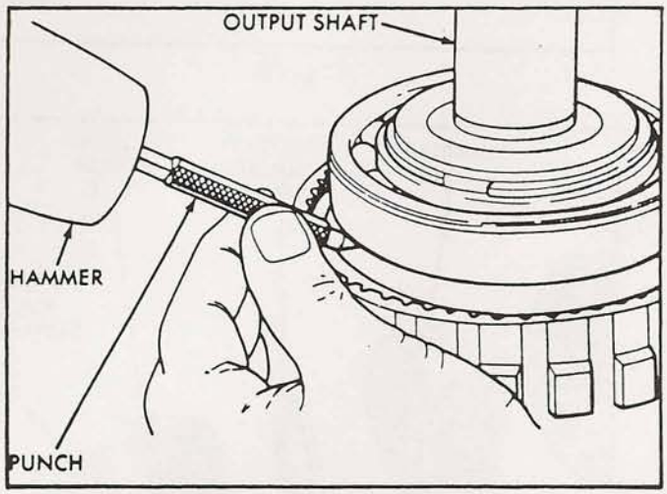

Figure 22

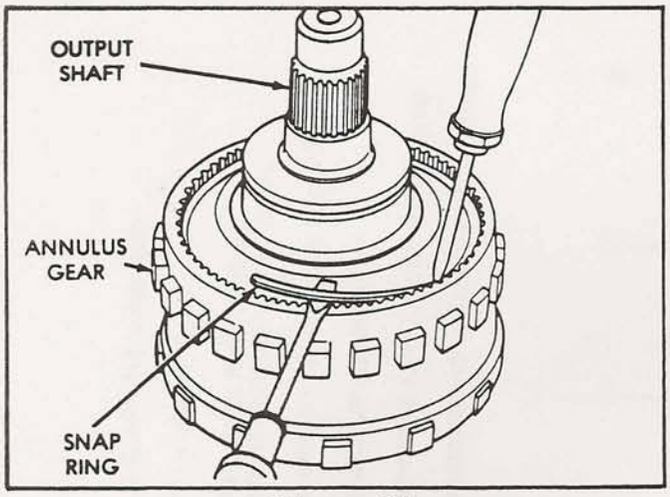

Figure 23

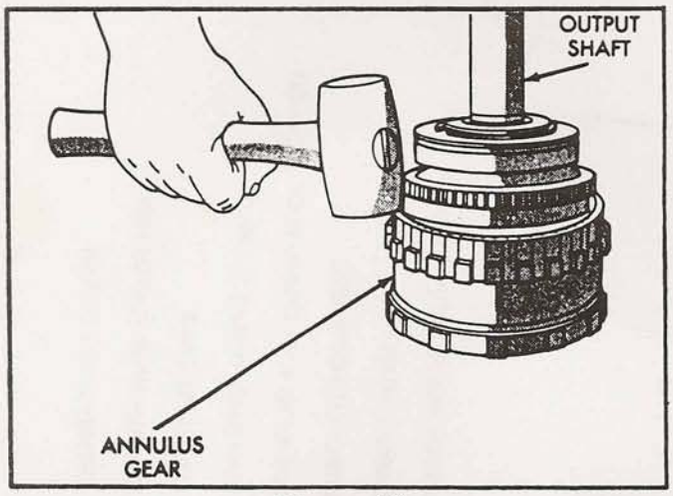

Figure 24

30. Remove the snap ring that secures the annulus ring gear on the output shaft, as shown in Figure 23. Use two screwdrivers to unseat and work the snap ring out of its groove, as shown in Figure 23.
31. Remove the annulus gear from the output shaft using a plastic mallet to tap the gear off of the shaft (See Figure 24).
32. Do not remove parking pawl and spring unless they are damaged.

Clean the geartrain and all components in good clean solvent (See Figure 25). Dry all parts, except the bearings, with compressed air. Allow the bearings to air dry.

Do not use shop towels for wiping parts dry unless the towels are made from lint free material.

Inspect the geartrain and all components for any wear and/or damage, and replace as necessary.

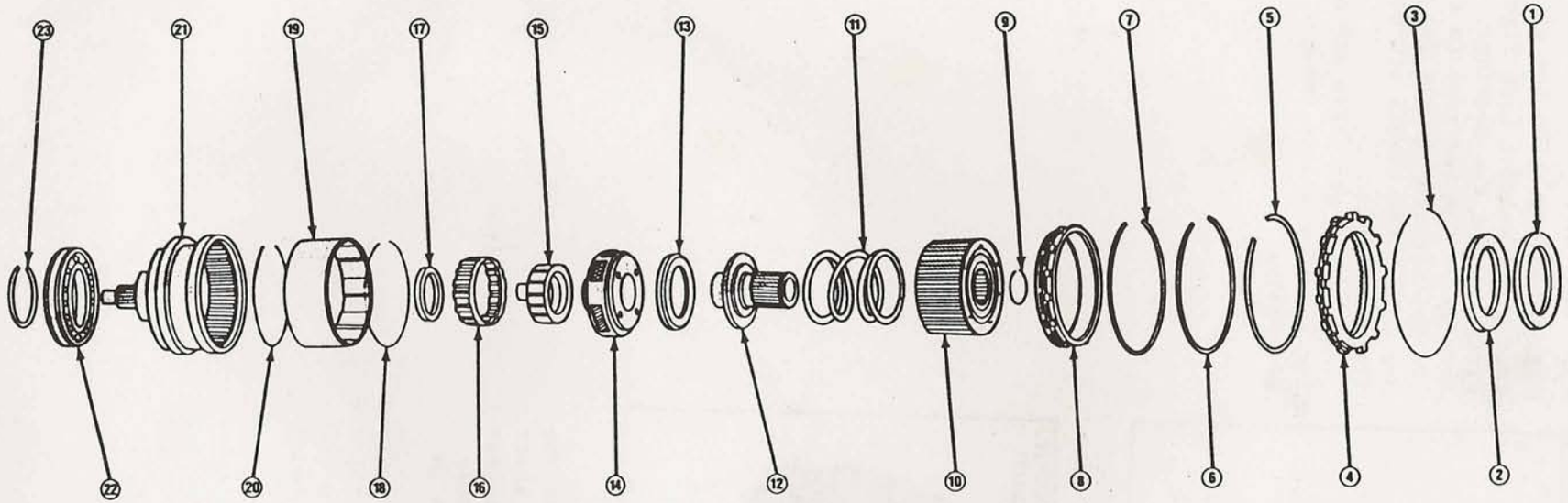

1. OVERDRIVE PISTON THRUST PLATE
2. OVERDRIVE PISTON THRUST BEARING
3. OVERDRIVE CLUTCH PACK RETAINING RING
4. OVERDRIVE CLUTCH PACK
5. OVERDRIVE CLUTCH REACTION RING
6. OVERDRIVE CLUTCH SNAP RING
7. DIRECT CLUTCH PACK SNAP RING
8. DIRECT CLUTCH PACK
9. CLUTCH HUB RETAINING RING
10. DIRECT CLUTCH HUB
11. DIRECT CLUTCH SPRING
12. SUN GEAR AND SPRING PLATE ASSEMBLY
13. PLANETARY THRUST BEARING
14. PLANETARY GEAR
15. OVERRUNNING CLUTCH HUB
16. OVERRUNNING CLUTCH
17. OVERRUNNING CLUTCH THRUST BEARING
18. RETAINING RING (CLUTCH DRUM INNER)
19. DIRECT CLUTCH DRUM
20. RETAINING RING (CLUTCH DRUM OUTER)
21. ANNULUS GEAR, OUTPUT SHAFT, AND SNAP RING ASSEMBLY
22. REAR BEARING
23. REAR BEARING SNAP RING

Figure 25

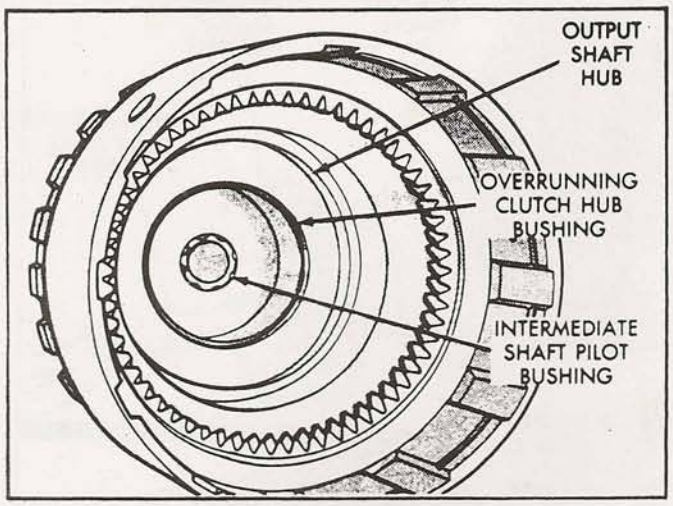

Figure 1

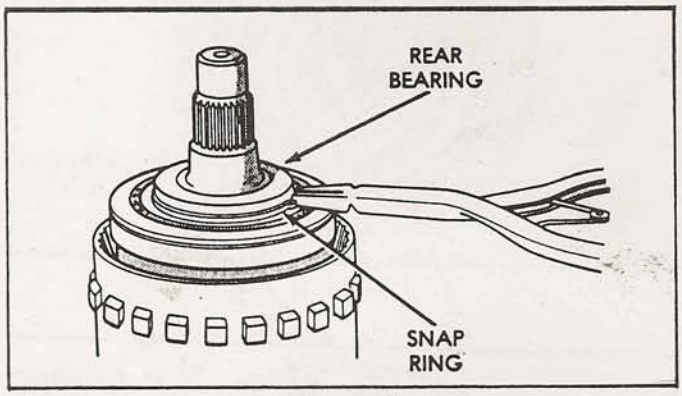

Figure 2

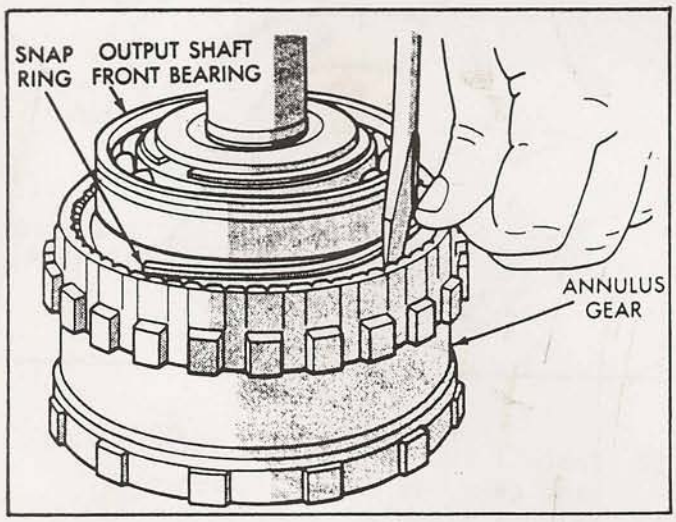

Figure 3

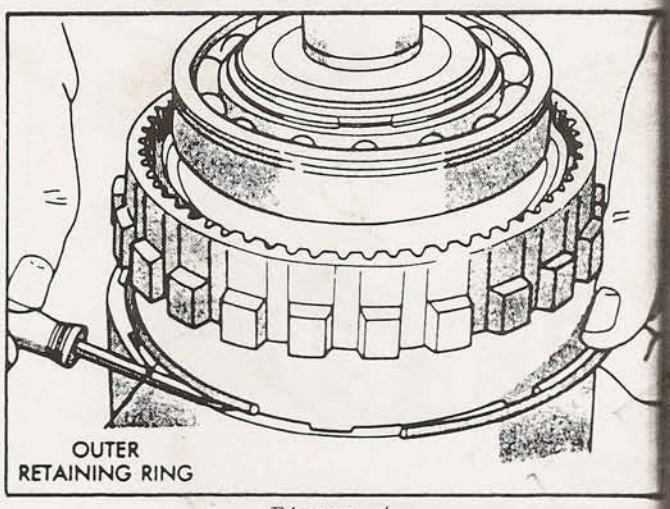

Figure 4

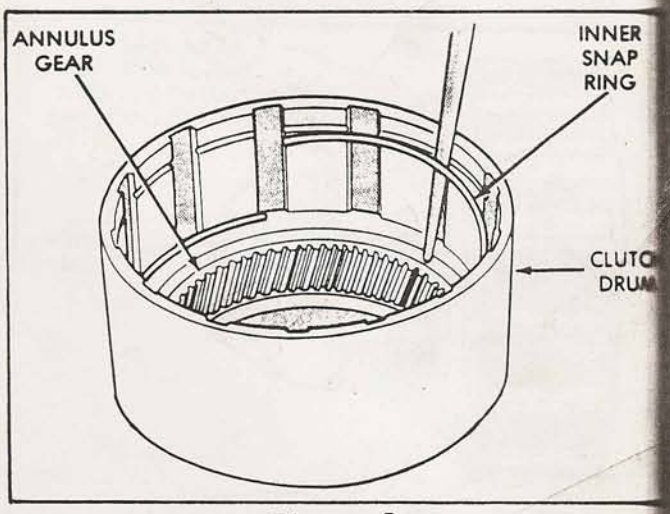

Figure 5

OVERDRIVE SECTION ASSEMBLY

1. Soak direct clutch and overdrive clutc plates in transmission fluid for 10-20 minutes.
2. Inspect the bushings in the output sh- aft as shown in Figure 1, and replace as necessary.
3. Lubricate both bushings with a small amount of Trans-Jel (See Figure 1).
4. Install the ball bearing and snap rin on output shaft. Be sure locating rin groove in bearing is toward rear, as shown in Figure 2.
5. Align and install output shaft in the annulus gear, and install the snap ri as shown in Figure 3.
6. Align and install annulus gear in the direct drum, and install the outer sn ring, as shown in Figure 4.
7. Turn the assembly over and install th inner snap ring in direct drum, shown in Figure 5.

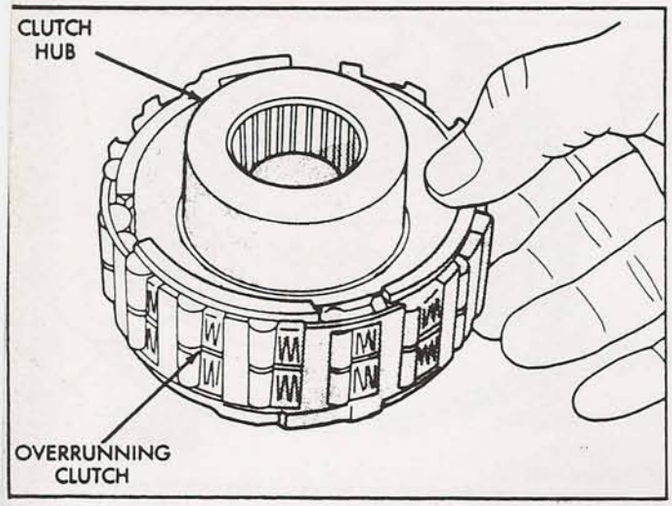

Figure 6

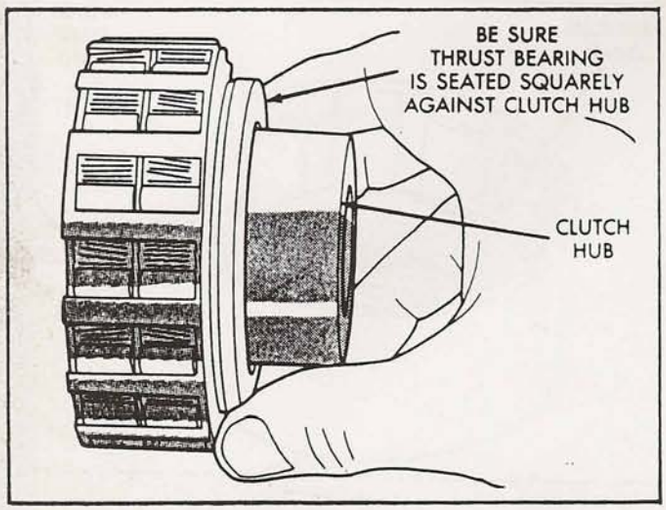

Figure 7

8. Install the overrunning clutch on the hub (Inner Cam), as shown in Figure 6. Note that roller clutch only fits one way. Shoulder on roller clutch should seat in small recess at edge of hub.
9. Install thrust bearing on overrunning clutch hub, as shown in Figure 7, and retain with liberal amount of Trans-Jel (See Figure 7). Be sure bearing is seated Flat against hub (See Figure 7).
10. Install overrunning clutch in output shaft, using snap ring pliers, with a counterclockwise twisting motion, as shown in Figure 8.
11. Overrunning clutch assembly should free-wheel counterclockwise and lock clockwise.

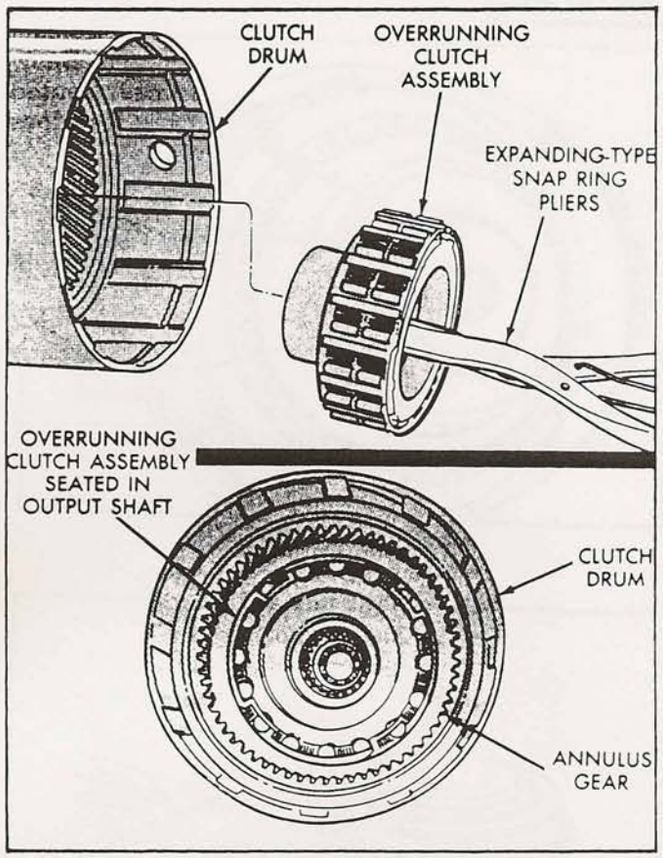

Figure 8

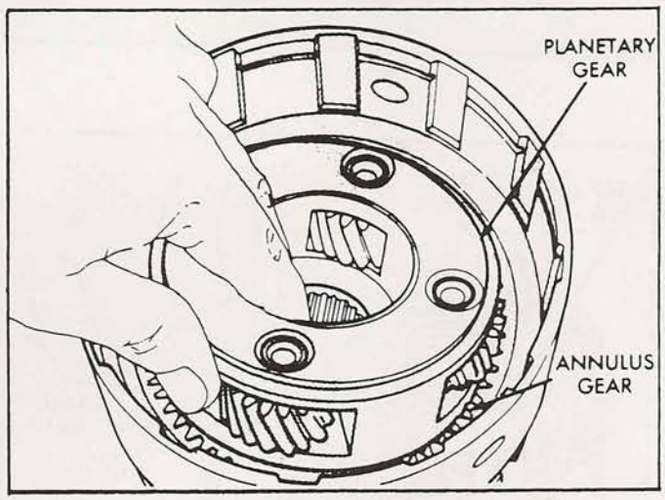

Figure 9

12. Install the overdrive carrier into the ring gear, as shown in Figure 9.
13. Be sure planetary pinions are fully seated in ring gear before proceeding.

Continued on Page 84.

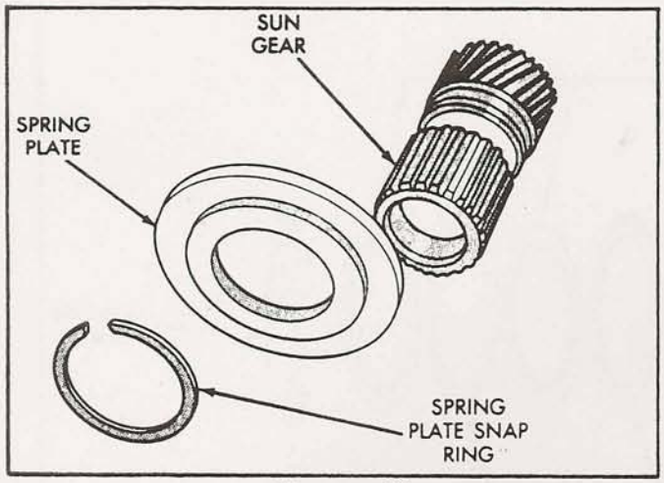

Figure 10

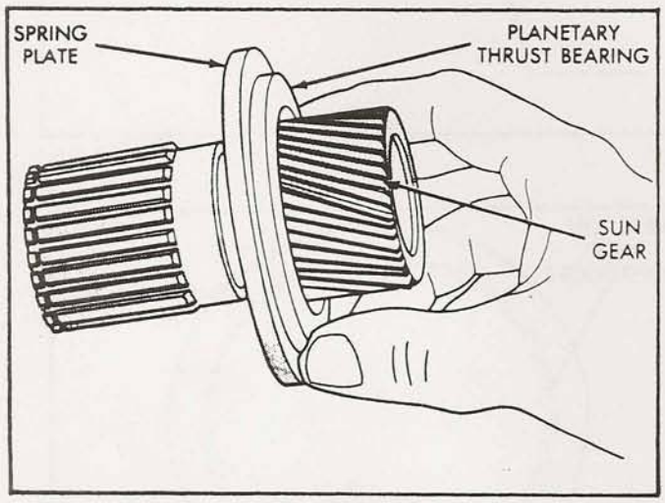

Figure 11

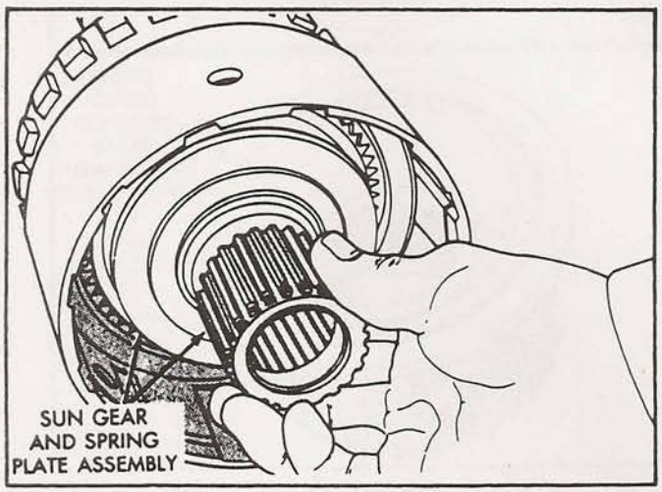

Figure 12

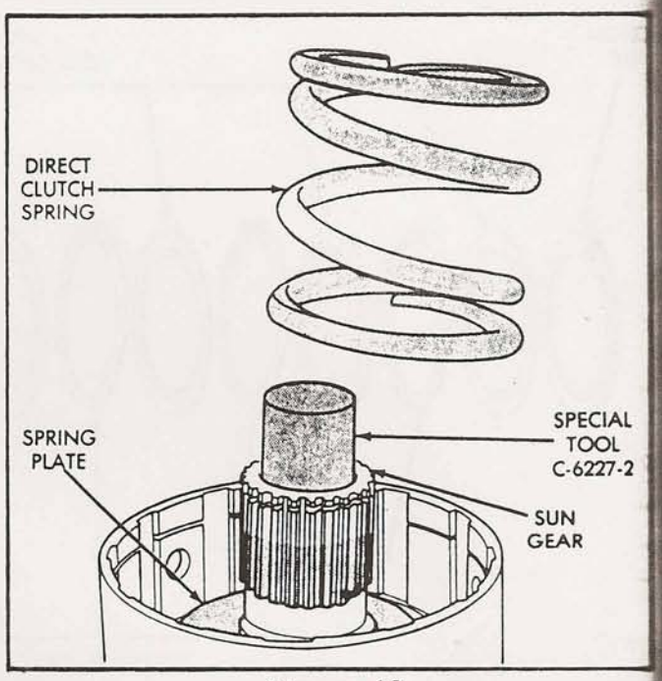

Figure 13

14. Install direct clutch spring plate on the sun gear, with the shoulder side of the plate facing out, as shown in Figure 10, and secure plate to the sun gear with the snap ring.
15. Install the bearing onto the spring plate using a liberal amount Trans-Jel to retain. Be sure bearing sits square against plate as it only fits one way (See Figure 11).
16. Install completed sun gear assembly in overdrive carrier until fully seated, as shown in Figure 12.
17. Mount the assembled output shaft, and direct drum in shop press, as direct clutch spring and direct clutches are easier to install.
18. Align the splines in hubs of planetary carrier and overrunning clutch using Tool 6227-2, as shown in Figure 13.
19. Install direct clutch spring down on the spring plate (See Figure 13).
20. Install the direct clutch reaction plate on direct clutch hub first.
    Notice that one side of reaction plate is counterbored on the inside diameter, as shown in Figure 15. Be sure this side faces rearward. Splines at rear of direct clutch hub are slightly raised. The counterbore in reaction plate fits over raised splines.
    Plate should be FLUSH with this end of hub, as shown in Figure 15.

Continued on Page 86.

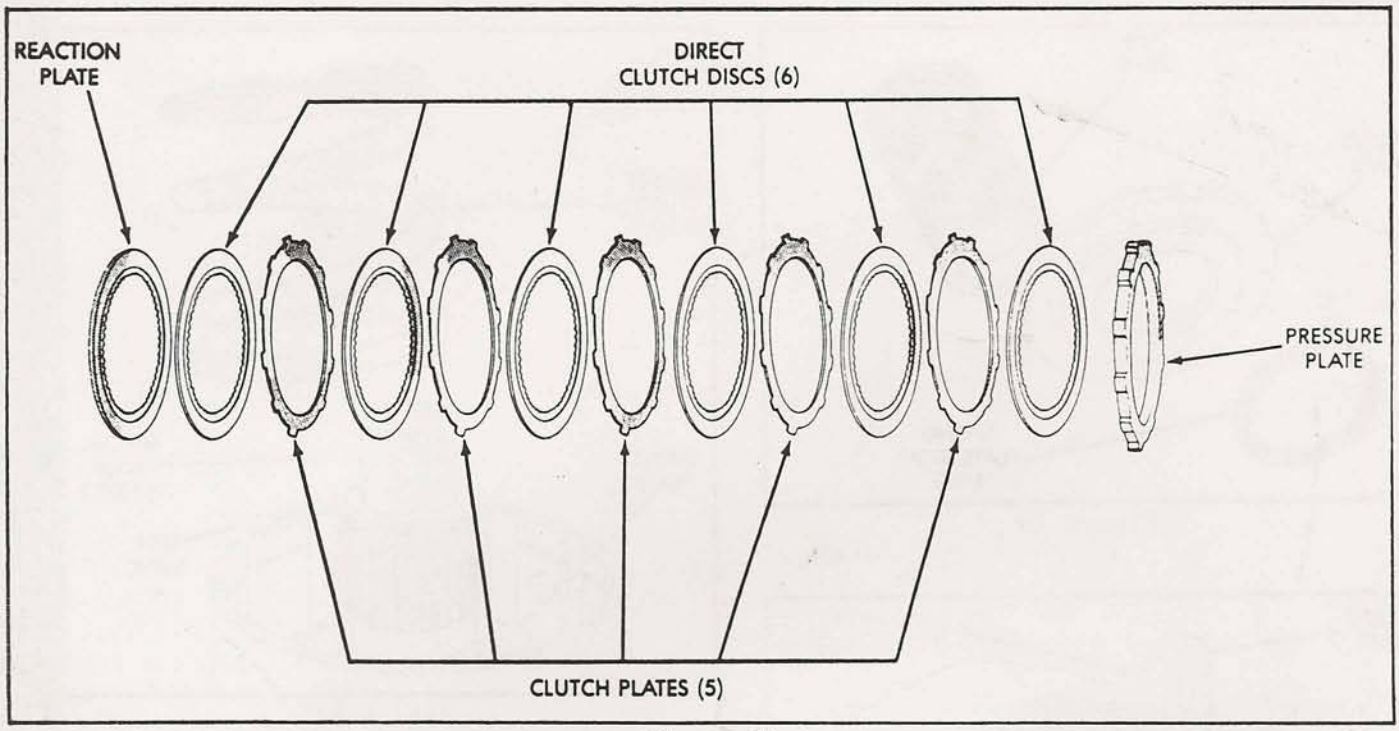

Figure 14

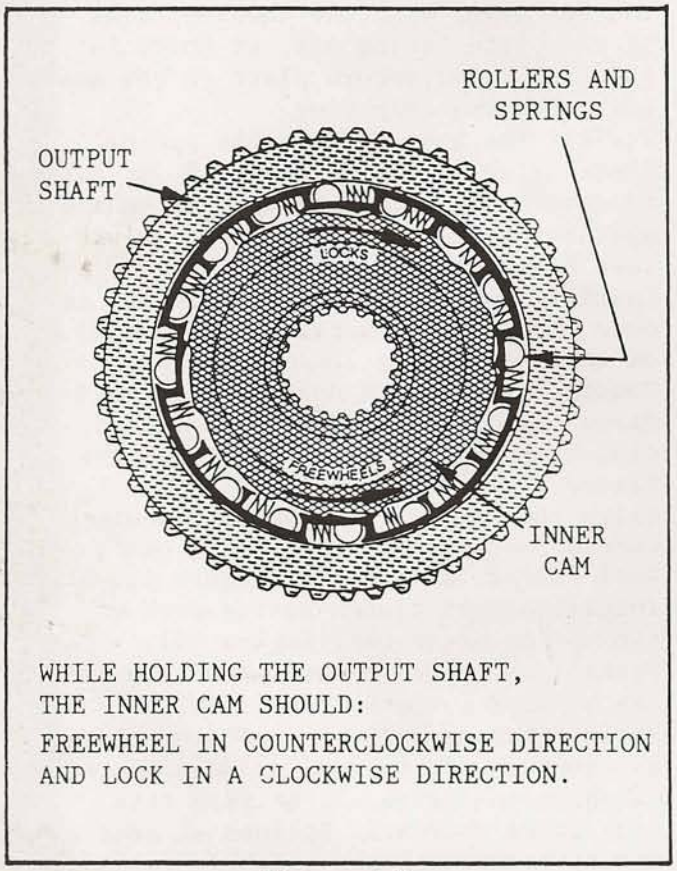

Figure 14A

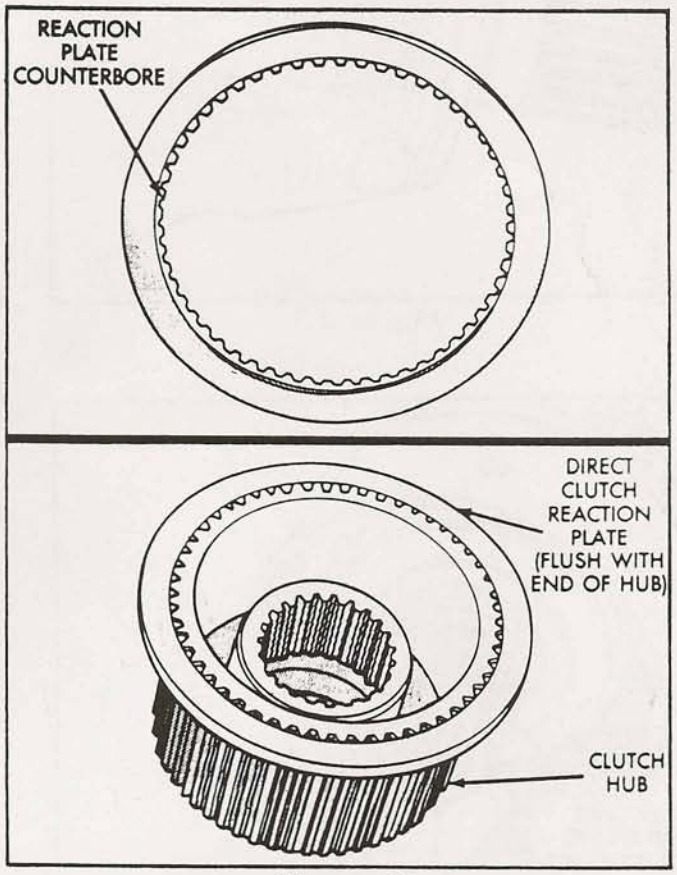

Figure 15

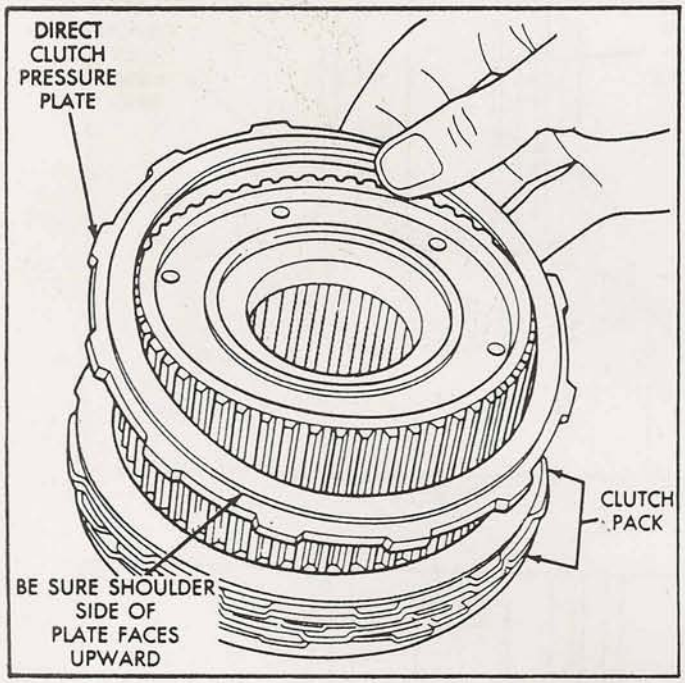

Figure 16

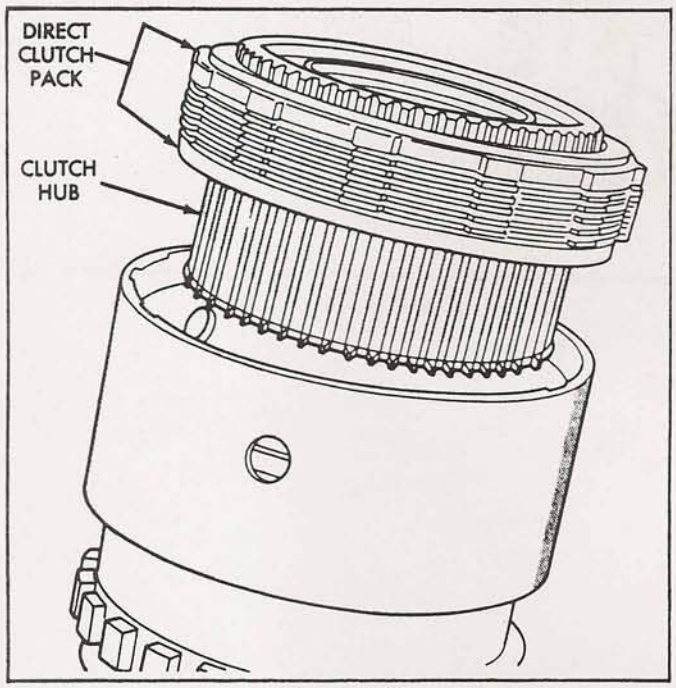

Figure 17

21. Install the first lined direct clutch plate over the hub and against reaction plate, followed by a steel plate until 6 lined plates and 5 steel plates have been installed (See Figure 16).
22. Install the direct clutch pressure plate on top of the last lined plate with the shoulder side of pressure plate up as shown in Figure 16.
23. Install clutch hub and direct clutch pack assembly on the direct clutch spring, and be sure hub is started on the sun gear splines (See Figure 17).

WARNING: THE NEXT STEP IN GEARTRAIN ASSEMBLY INVOLVES COMPRESSING THE DIRECT CLUTCH HUB AND SPRING. IT IS EXTREMELY IMPORTANT THAT PROPER EQUIPMENT BE USED TO COMPRESS THE SPRING AS SPRING FORCE IS APPROXIMATELY 830 POUNDS. USE SPRING COMPRESSOR TOOL C-6227-1 AND A HYDRAULIC-TYPE SHOP PRESS WITH A MINIMUM RAM TRAVEL OF 5-6 INCHES. THE PRESS MUST ALSO HAVE A BED THAT CAN BE ADJUSTED UP OR DOWN AS REQUIRED. RELEASE CLUTCH SPRING TENSION SLOWLY AND COMPLETELY TO AVOID PERSONAL INJURY.

24. Position Compressor Tool 6227-1 on the clutch hub, as shown in Figure 18.
25. Position special tool or similar type tool on top of Tool 6227-1, as shown in Figure 18.
26. Compress the clutch hub and spring just enough to place tension on hub and hold it in place.
27. Slide direct clutch pack upwards on hub and set clutch pack on edge of the compressor tool as shown in Figure 19.
28. Slowly compress clutch hub and spring enough to expose ring grooves for the clutch pack snap ring and the clutch hub retaining ring.
29. Install the direct clutch plates and pressure plate into direct clutch drum as shown in Figure 19.
30. Install direct clutch snap ring, shown in Figure 20, and be VERY sure snap ring is fully seated in groove.
31. Install clutch hub retaining ring, as shown in Figure 21, and be VERY sure that snap ring is fully seated in the groove.
32. Slowly release press ram, remove the compressor tools and geartrain.

Continued on Page 88.

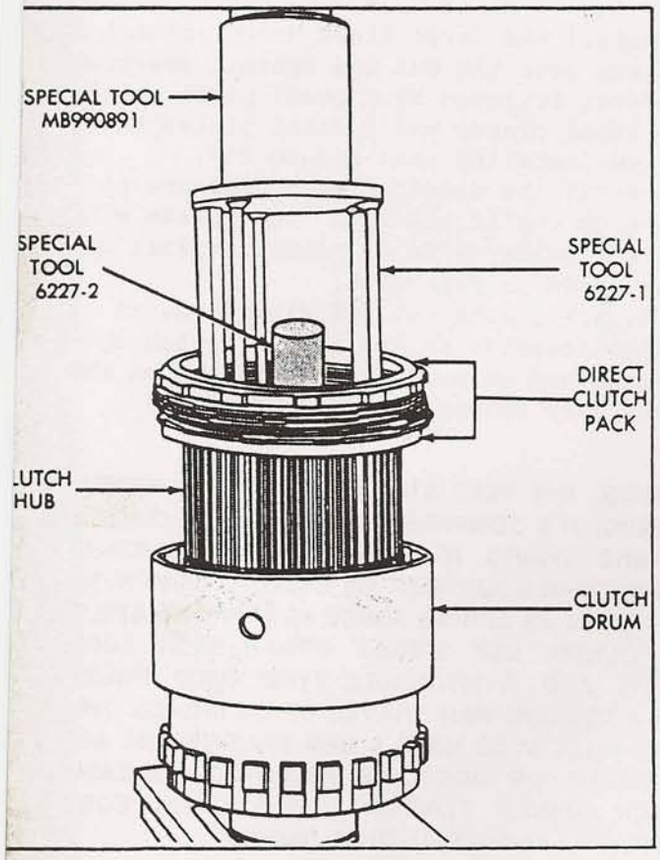

Figure 18

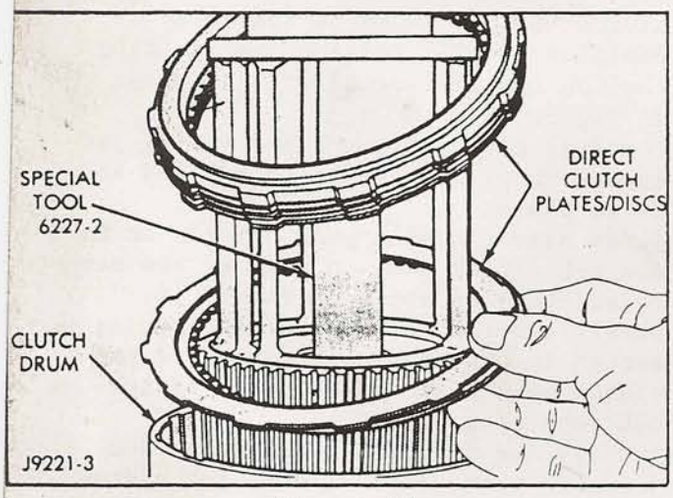

Figure 19

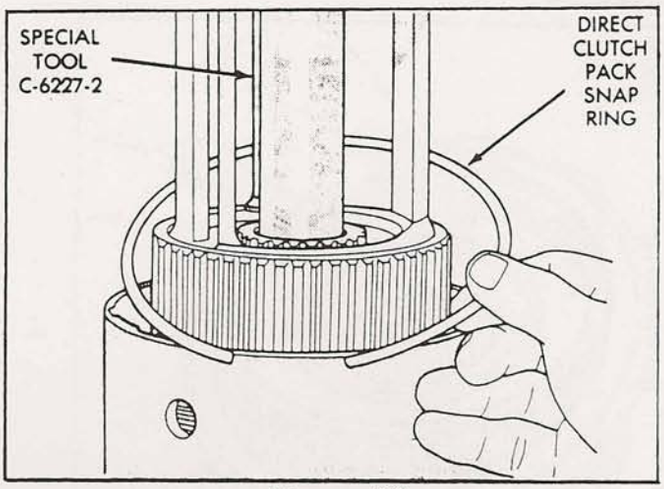

Figure 20

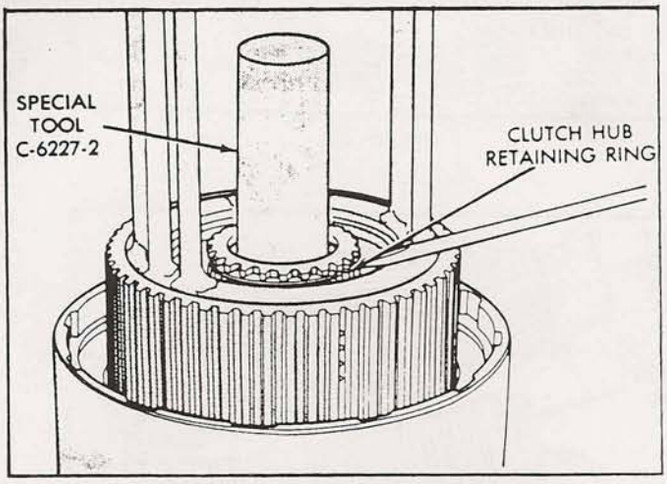

Figure 21

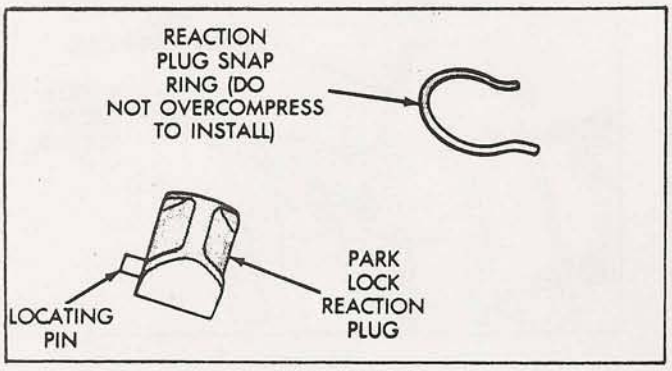

Figure 22

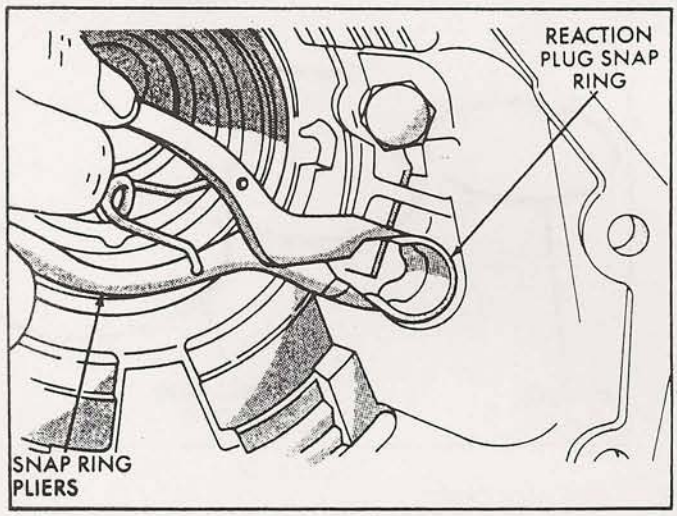

Figure 23

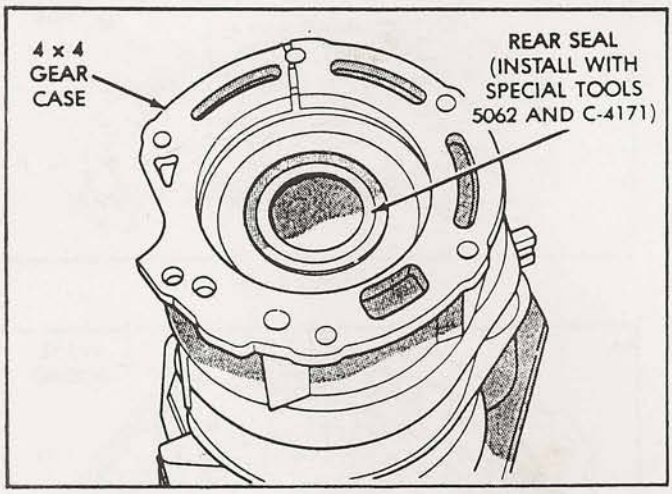

Figure 24

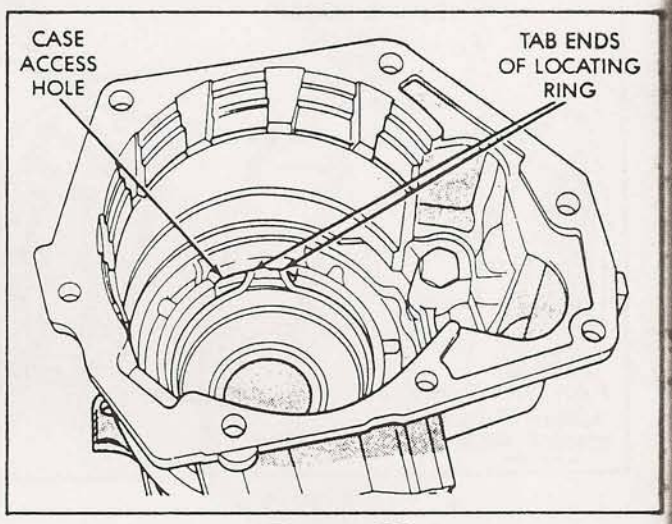

Figure 25

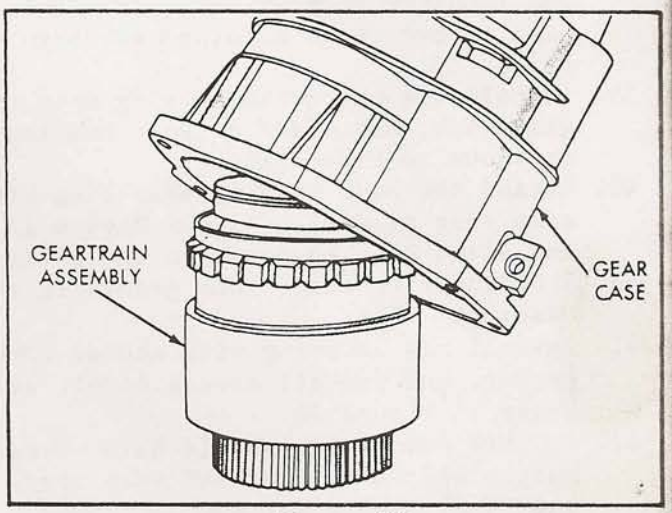

Figure 26

33. Position parking pawl and spring into overdrive housing and install the park pawl pivot shaft. Verify that end of spring with the 90° bend is hooked to park pawl and straight end of spring is seated against housing.
34. Install parking pawl shaft retaining bolt, and torque to 20 ft.lbs.
35. Install park lock reaction plug into overdrive housing (See Figure 22). Be pin is seated in the hole in housing before installing snap ring.
36. Install the reaction plug snap ring as shown in Figure 23, and compress snap ring only enough for installation. Do not distort snap ring.
37. Install new rear seal in the overdrive housing, as shown in Figure 24, using proper size seal driver.

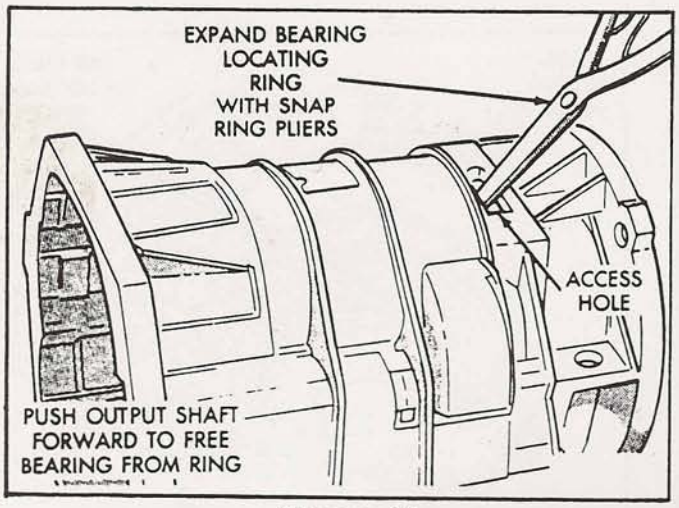

Figure 27

38. Verify that the tab ends of rear bearing locating ring extend into access hole in overdrive housing, as shown in Figure 25.
39. Install the overdrive housing onto the geartrain, and start on rear bearing, as shown in Figure 26.
40. Expand the rear bearing snap ring with snap ring pliers, as shown Figure 27, and slide housing downward until the locating ring snaps into groove in the bearing.
41. Install new locating ring access cover gasket, and install access cover, as shown in Figure 28.
42. At this point, you should have three snap rings left, one FLAT snap ring, one WAVED snap ring, and one ROUND (Wire) snap ring, shown in Figure 29.
43. Install the FLAT snap ring first into the groove in the overdrive housing as shown in Figure 30, and ensure that it is fully seated.
44. Install the WAVE snap ring on top of the FLAT snap ring, and into the same groove, as shown in Figure 31, ensure that it is fully seated.
45. The FLAT snap ring and the WAVE snap ring fit into the same groove. (See Figure 32).

Continued on Page 91.

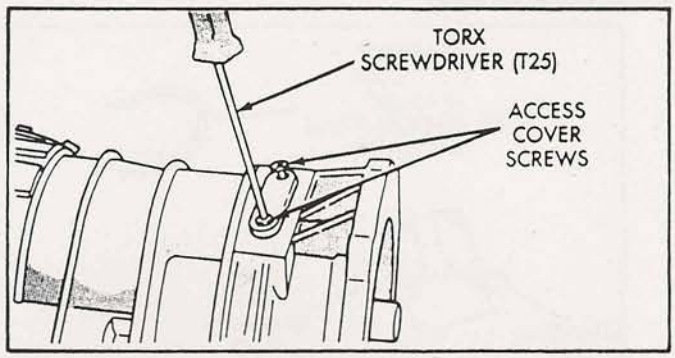

Figure 28

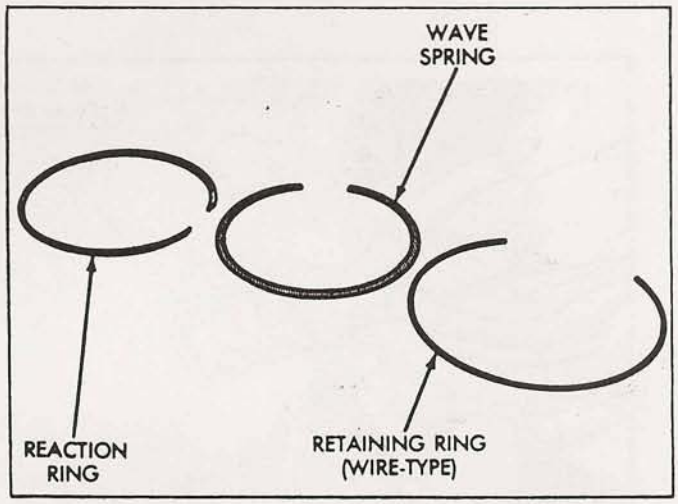

Figure 29

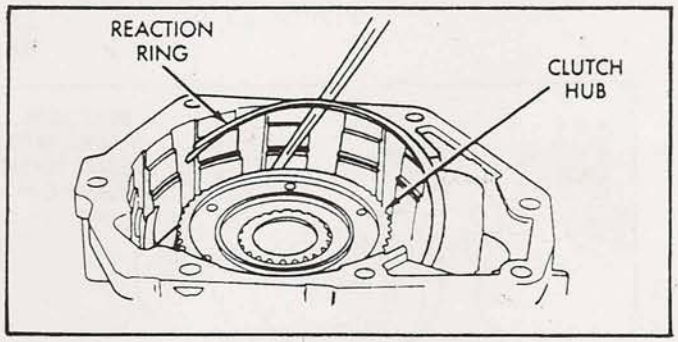

Figure 30

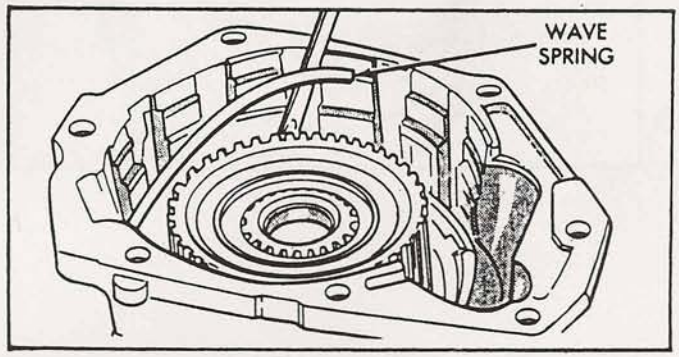

Figure 31

OVERDRIVE SECTION COMPONENTS

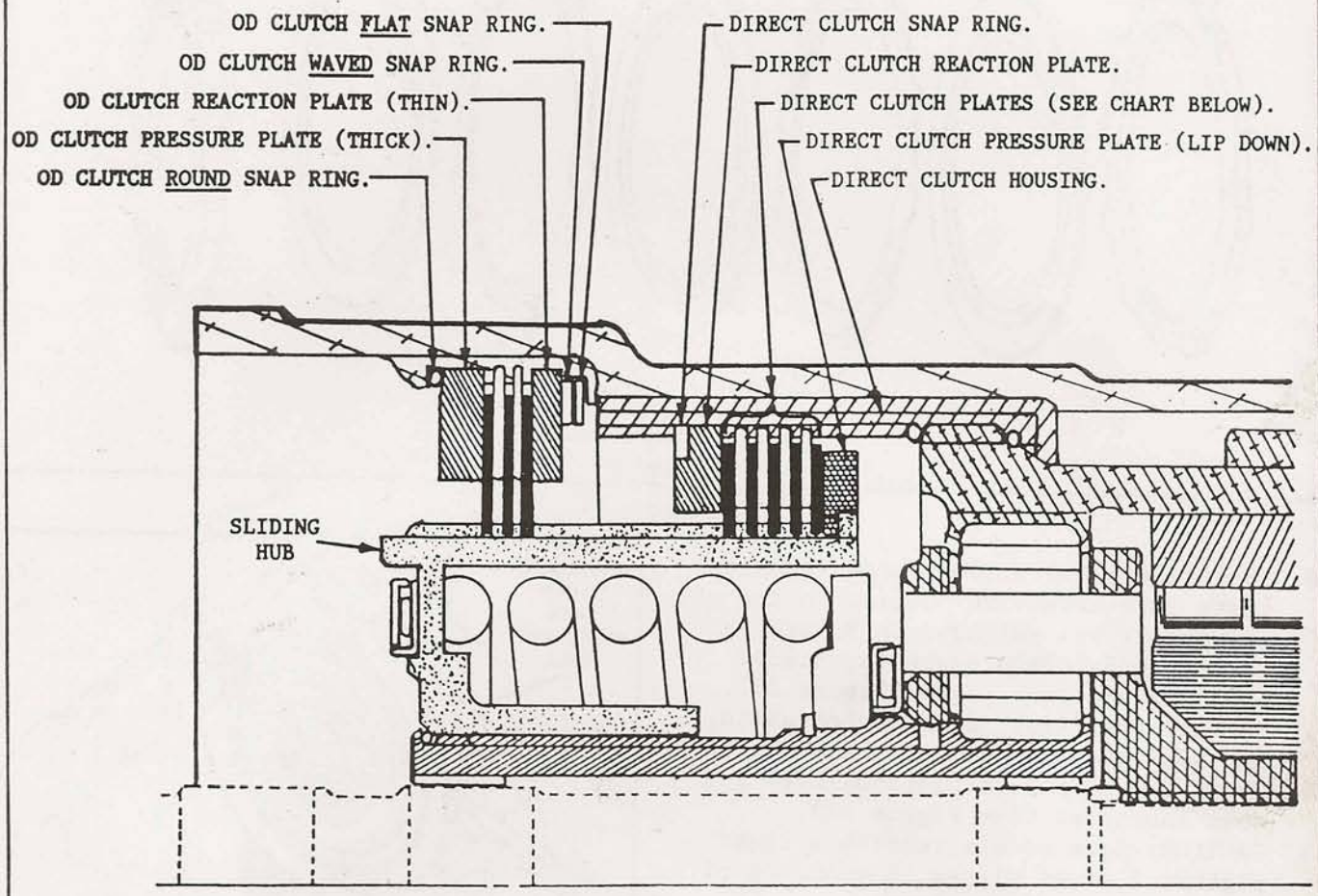

Figure 32

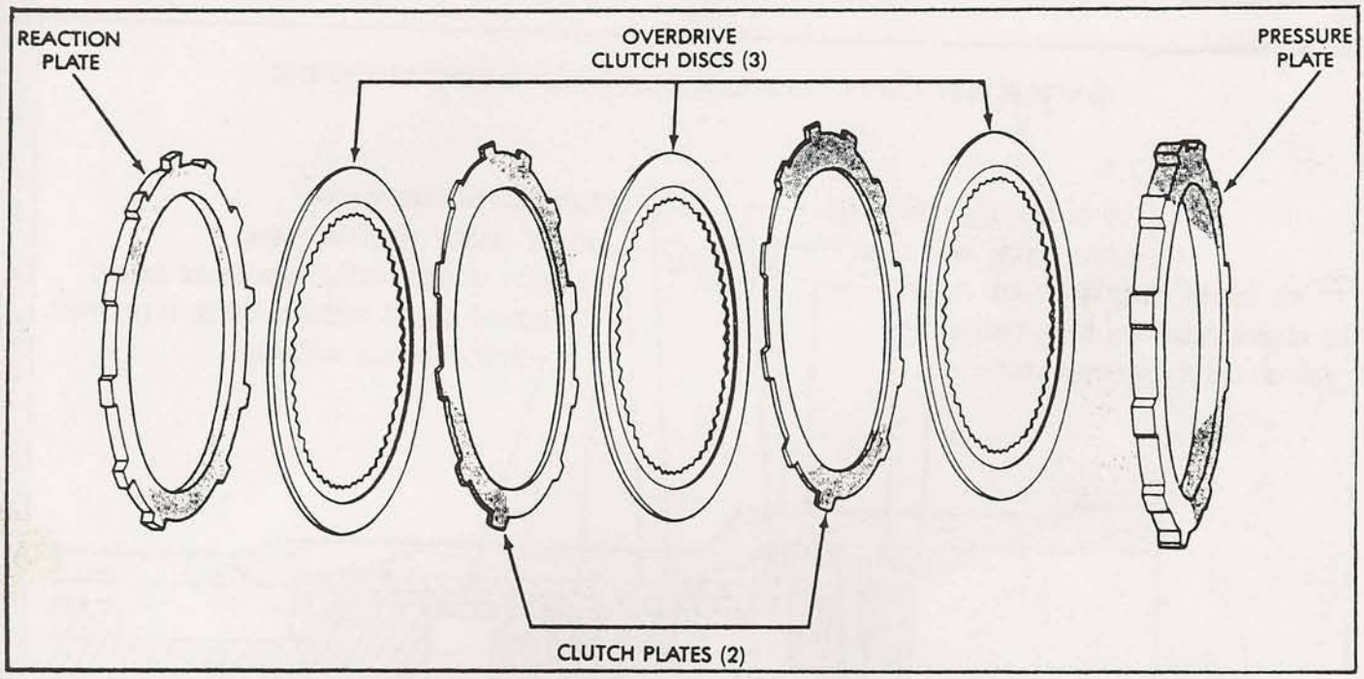

Figure 33

46. Install the overdrive clutch reaction plate into overdrive housing on top of the snap rings as shown in Figure 33. Note that reaction plate is thinner than the pressure plate (Figure 33).
47. Install the first lined clutch plate, followed by a steel plate, alternating until the overdrive clutches have all been installed (See Figure 33).
48. CAUTION: Some models require 3 lined plates, 2 steel plates, 1 reaction plate, and 1 pressure plate.
    Other models require 4 lined plates, 3 steel plates, 1 reaction plate, and 1 pressure plate.
    Be sure you put back the same amount of overdrive clutches that you took out of the unit.
49. Install the ROUND (Wire-Type) snap ring on top of the pressure plate, as shown in Figure 34.
    This ring is only used to retain the overdrive clutches in place while the overdrive section assembly is being installed on the transmission.
50. Remove the spline alignment tool from the overdrive section (See Figure 35).

Continued on Page 92

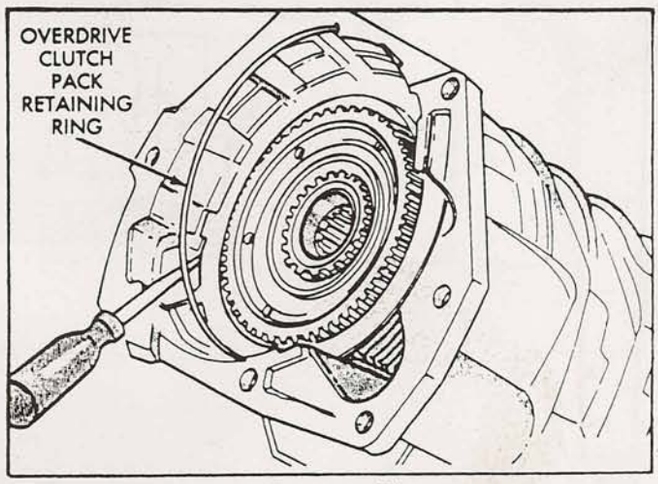

Figure 34

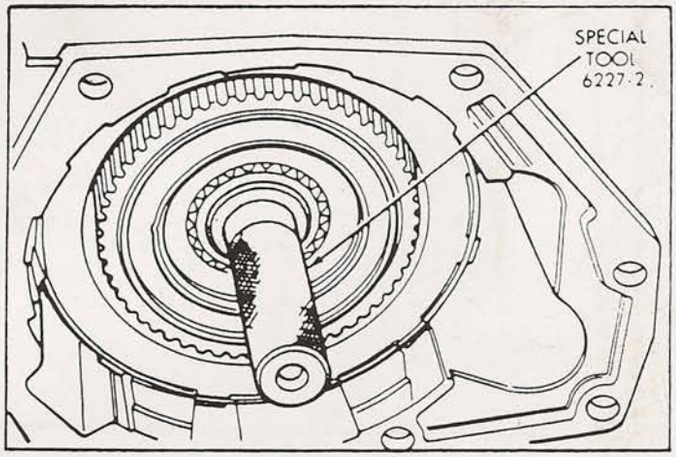

Figure 35

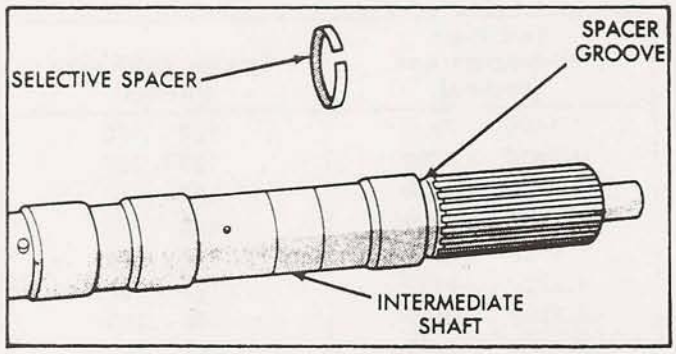

Figure 36

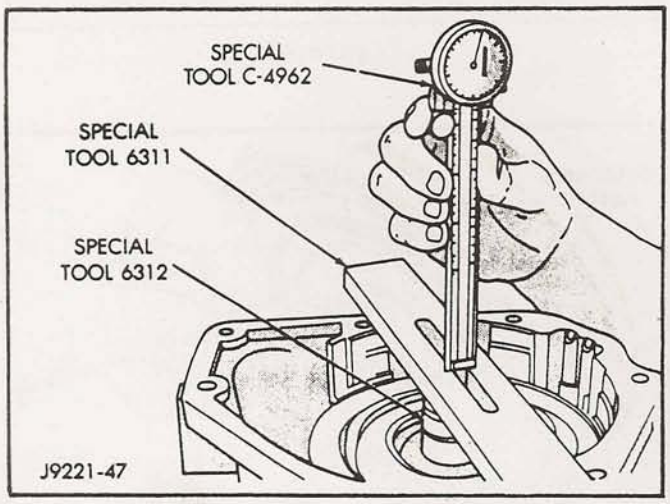

Figure 37

End Play Measurement (Inches)			Spacer Thickness (Inches)		
18.63	.7336 - .7505	19.06	4.01	.158 - .159	4.03
19.06	.7506 - .7675	19.49	4.445	.175 - .176	4.470
19.497	.7676 - .7855	19.95	4.902	.193 - .194	4.927
19.954	.7856 - .8011	20.347	5.359	.211 - .212	5.384

Figure 38

51. Place overdrive unit in vertical position and mount in vise, or on bench, with the appropriate size mounting hole cut into it. Be sure unit is facing upward for access to direct clutch hub, as shown in Figure 40.

WARNING: THE NEXT STEP IN ASSEMBLY INVOLVES CHECKING THE SELECTIVE SPACER AND SELECTIVE WASHER. THIS IS A MANDATORY STEP, AND THIS REQUIRES SPECIAL TOOLS. THESE SPECIAL TOOLS CAN BE MANUFACTURED, AND WE HAVE PROVIDED THE DIMENSIONS TO MAKE THE NEEDED SPECIAL TOOLS ON PAGE 94.

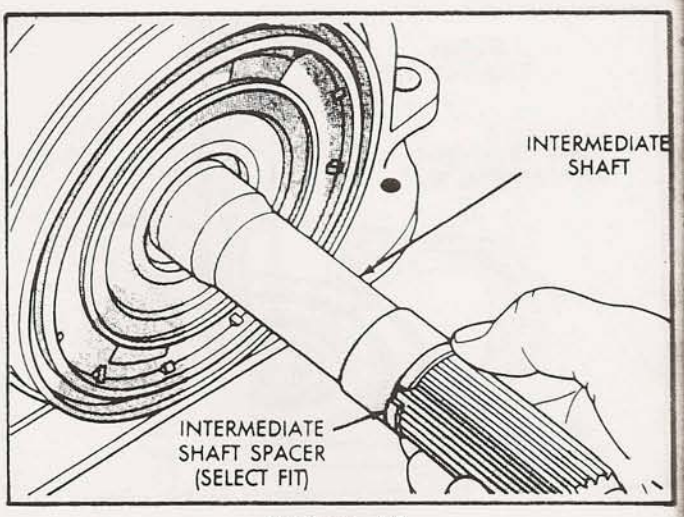

Figure 39

52. The spacer on the intermediate shaft is selective, and sets the end play on the intermediate shaft (See Figure 36).
53. Insert Special Tool 6312 through the sun gear and into pilot bushing in the output shaft (See Figure 37).
54. Position Gauge Tool 6311 across face of the overdrive housing, as shown in Figure 37.
55. Then position dial caliper over gauge tool, as shown in Figure 37. Extend the sliding scale of dial caliper downward through gauge tool slot until the scale contacts the end of Gauge Tool 6312. Lock the scale in place, remove dial caliper and note distance measured.
56. Select the proper thickness selective spacer from the spacer chart as shown in Figure 38, based on the distance measured.
57. Install the proper selective spacer on intermediate shaft (See Figure 39).
58. Remove special tool 6312 from overdrive section.
59. Position Gauge Tool 6311 across face of the overdrive housing, shown in Figure 40. Then position dial caliper over the gauge tool (See Figure 40).
60. Measure the distance to the clutch hub seat (Bearing Must Be Removed), at four points 90° apart. Then average these measurments by adding them and divide by 4.
61. Select the proper thickness selective washer from the information in thrust plate chart, shown in Figure 41.
62. Install the proper thickness selective thrust plate on overdrive piston, and retain with Trans-Jel (See Figure 42).

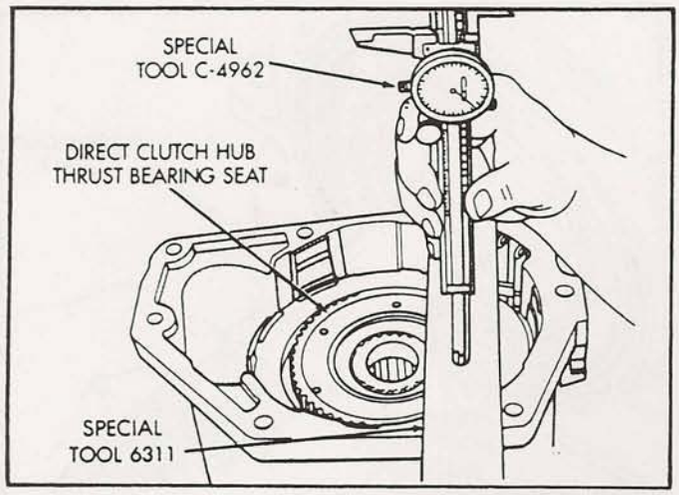

Figure 40

End Play Measurement (Inches)	Spacer Thickness (Inches)
1.7500 - 1.7649	.108 - .110
1.7650 - 1.7799	.123 - .125
1.7800 - 1.7949	.138 - .140
1.7950 - 1.8099	.153 - .155
1.8100 - 1.8249	.168 - .170
1.8250 - 1.8399	.183 - .185
1.8400 - 1.8549	.198 - .200
1.8550 - 1.8699	.213 - .215
1.8700 - 1.8849	.228 - .230
1.8850 - 1.8999	.243 - .245

Figure 41

63. Rotate the transmission and stand it up on the bell housing, as shown in Figure 43, in preparation to install the overdrive section.
64. Install thrust bearing on top of the selective thrust plate with the black side facing the piston, and retain with a liberal amount of Trans-Jel, as shown in Figure 43.

Continued on Page 95.

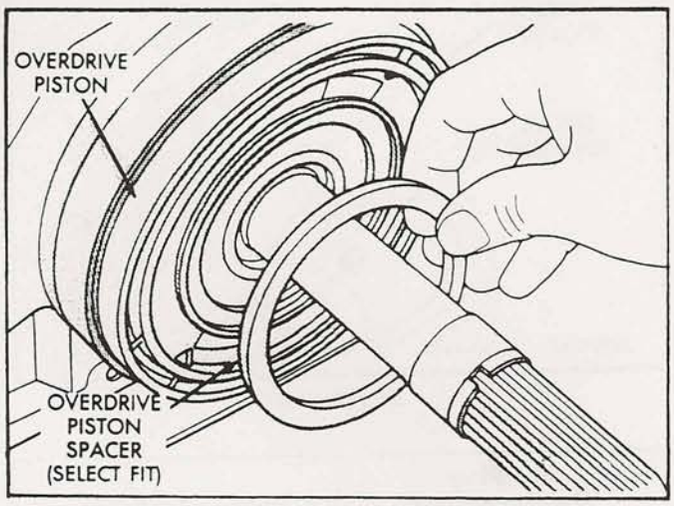

Figure 42

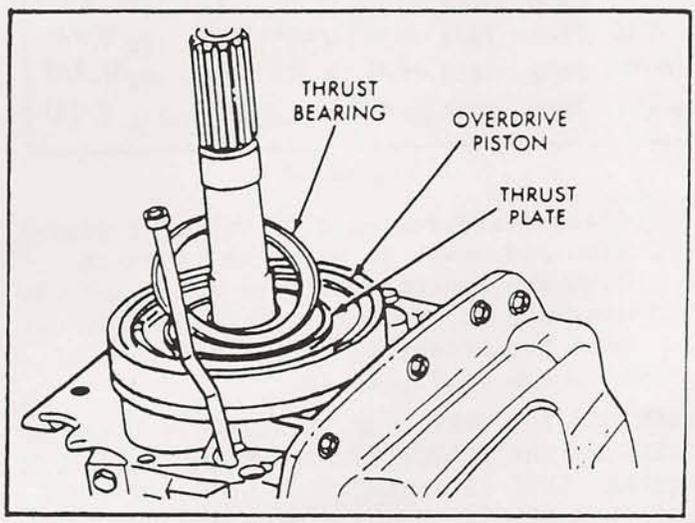

Figure 43

SPECIAL TOOL DIMENSIONS

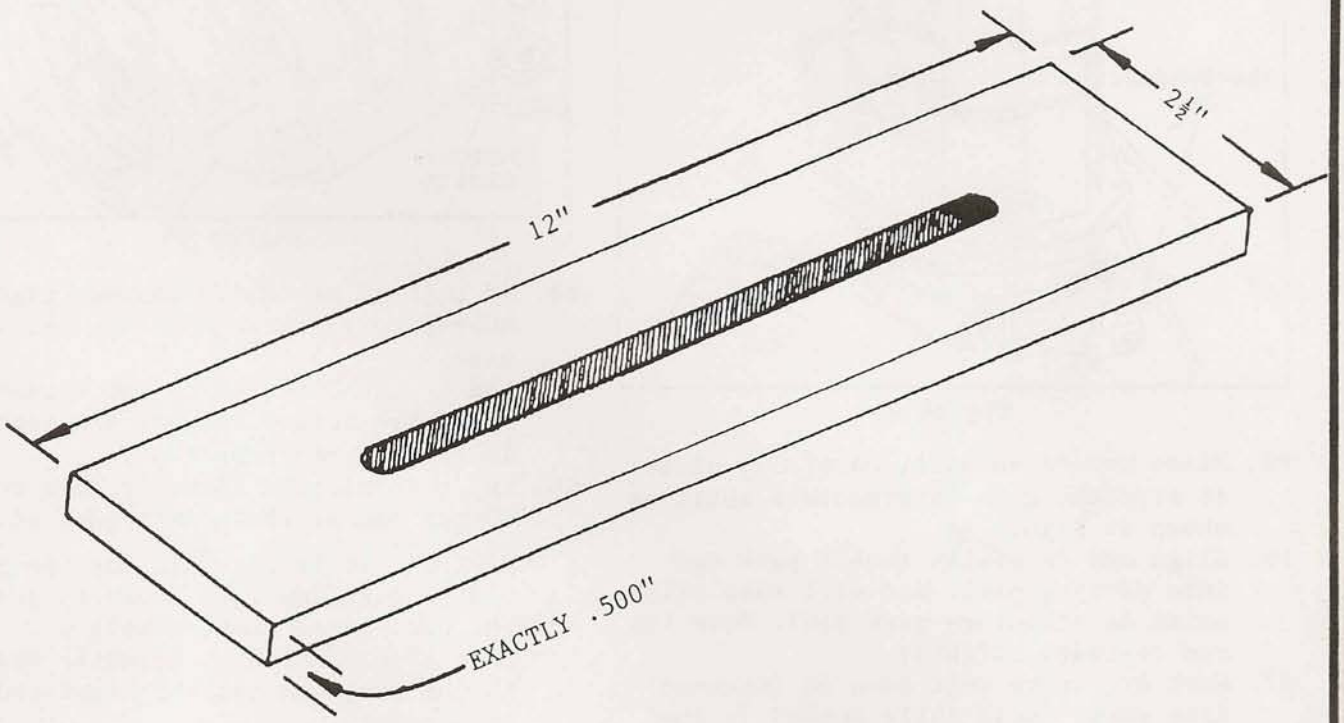

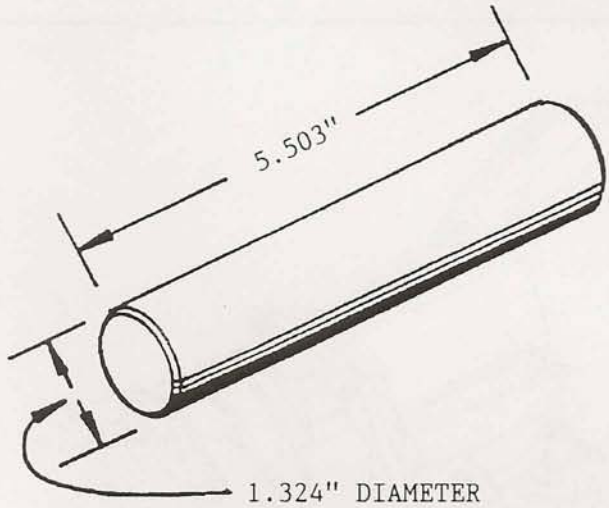

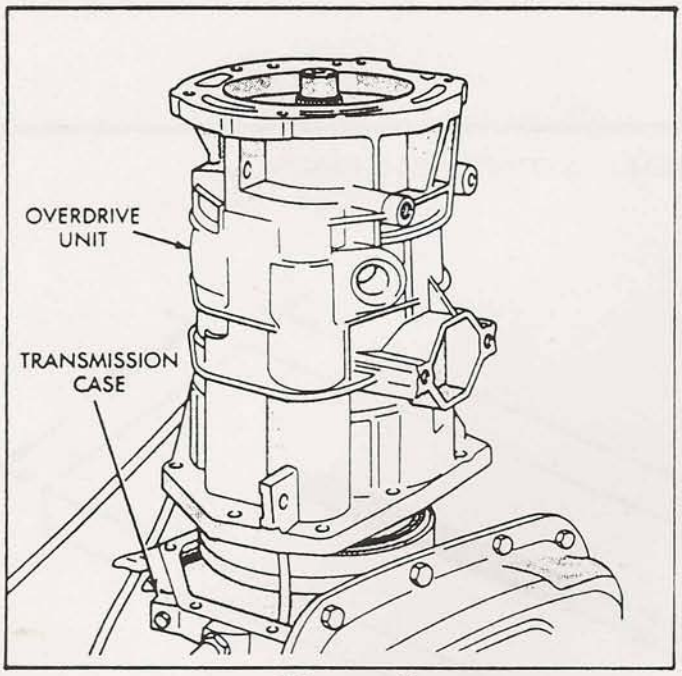

Figure 44

65. Raise overdrive unit, carefully slide it straight onto intermediate shaft as shown in Figure 44.
66. Align and carefully insert park rod into parking pawl. Rod will make click noise as it enters park pawl. Move the rod rearward slightly.
67. Work overdrive unit down on intermediate shaft until fully seated on the transmission case.

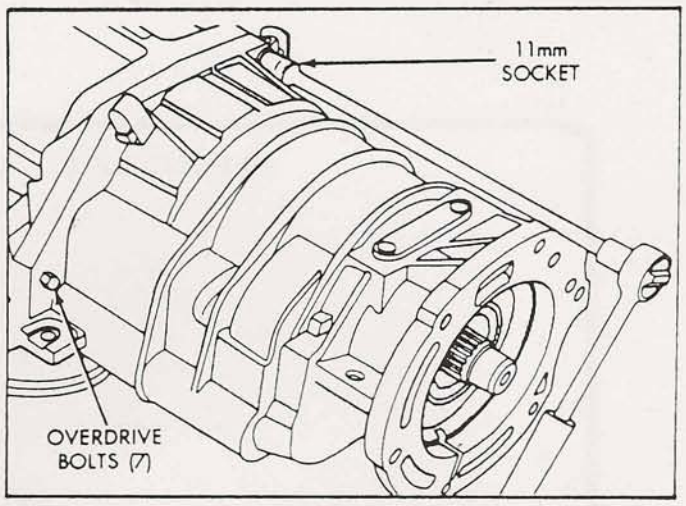

Figure 45

68. If unit is not fully seated, tighten overdrive bolts to draw the unit up to case.
69. Apply Lock-Tite 242 to the threads of overdrive bolts, install and torque to 25 ft.lbs (See Figure 45).
70. Lay transmission assembly down on the bottom pan as shown in Figure 46.

    CAUTION: It is possible for the park rod to displace into a cavity just over the pawl sprag when install O.D. unit. Make sure the rod is actually engaged in the pawl and has not displaced into this cavity.

Continued on Page 96.

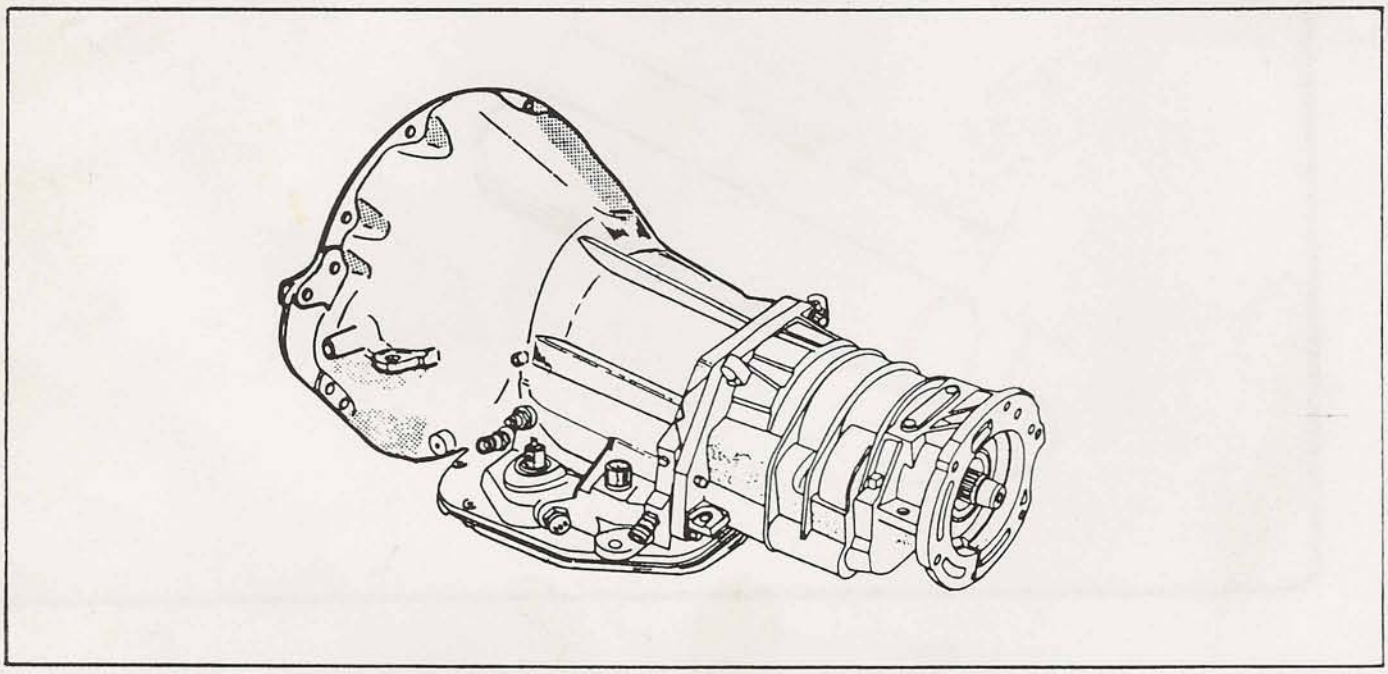

Figure 46

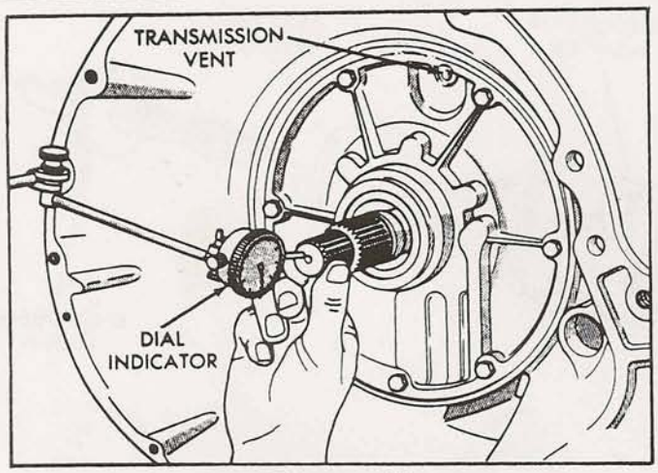

Figure 47

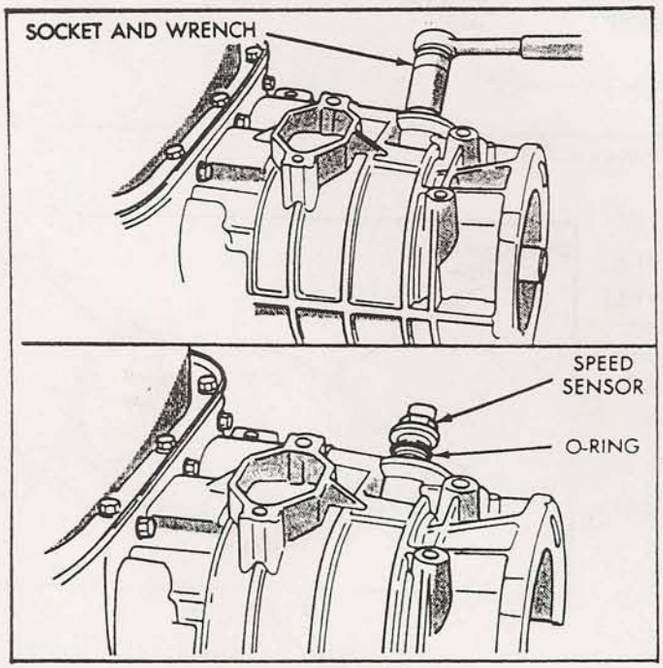

Figure 48

71. Be sure the wire harness clips are placed on appropriate overdrive bolts.
72. Measure and if necessary, correct input shaft end-play (See Figure 47).
73. Be sure overdrive unit is installed on transmission. End-play cannot be properly checked with O.D. unit off.
74. Attach dial indicator to bell housing, as shown in Figure 47.
75. Position indicator plunger against the end of input shaft and zero indicator.
76. Move the input shaft in and out and record the readings.
77. End-play should be .022"-.091".

0.55 - 2.31 MM

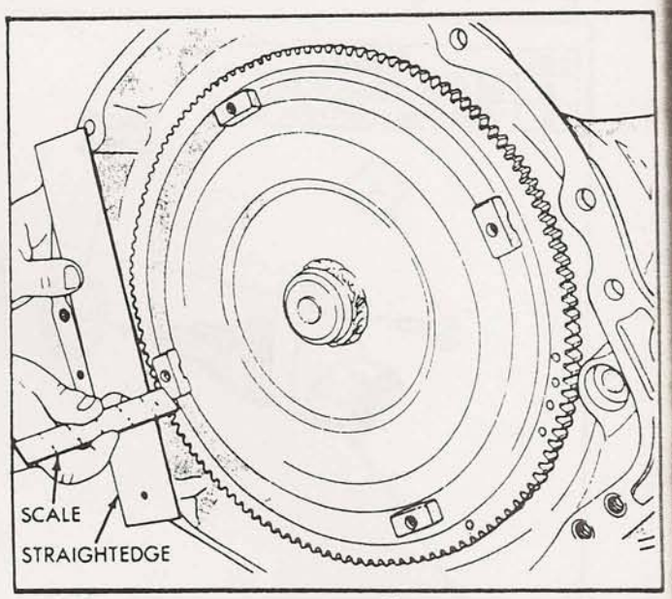

Figure 49

78. Intermediate shaft thrust washer that is in hub of rear clutch drum controls end-play. Thrust washer is selective and can be changed to adjust end-play.
79. If end-play turns out to be incorrect, remove oil pump, clutch drums, install thinner/thicker washer as necessary.
80. Install output shaft speed sensor into the overdrive housing, as shown Figure 48, with new "O" ring, and torque the sensor to 20 ft.lbs.
81. Install the torque converter as shown in Figure 49.
82. Surface of converter lugs should be 1/2" to the rear of straight edge when the converter is fully seated as shown in Figure 49.

43.3

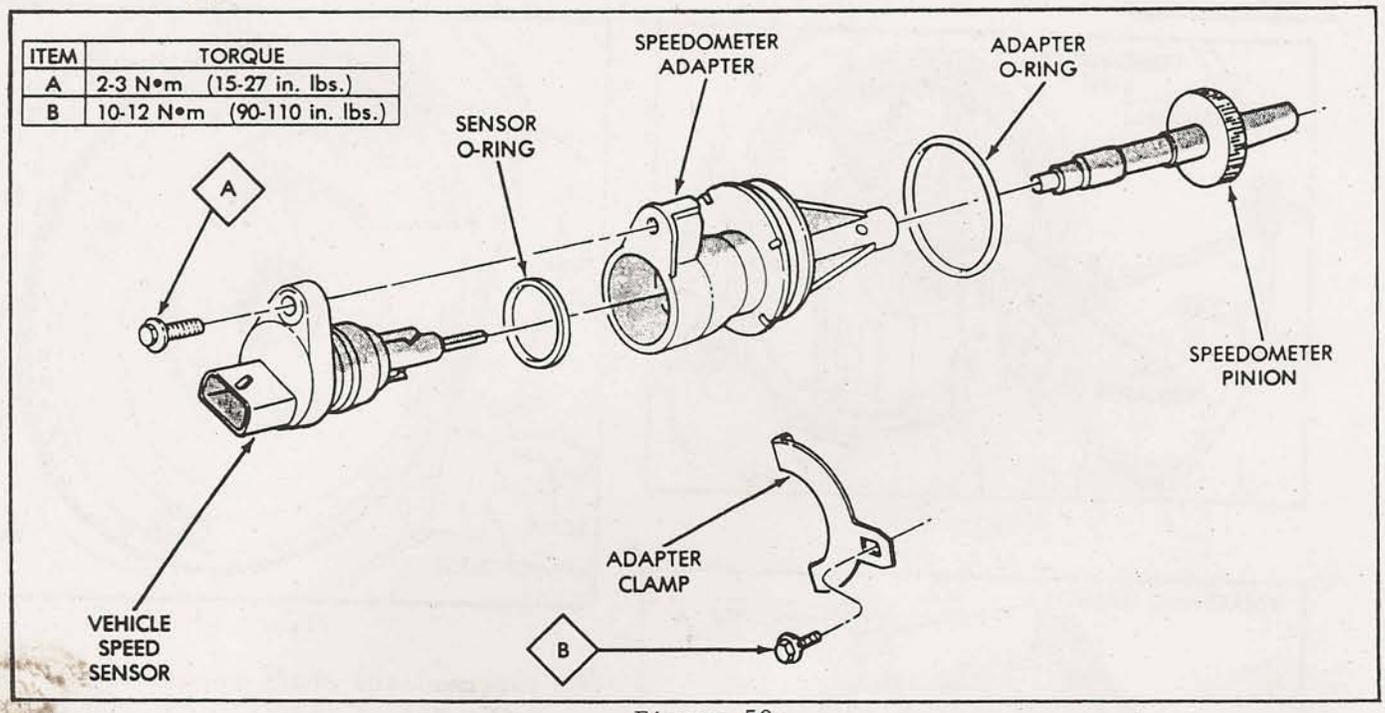

Figure 50

SPEEDOMETER INSTALLATION AND INDEXING

1. Thoroughly clean adapter flange and the adapter mounting surface in the housing. Surfaces must be clean for proper adapter alignment and speedometer operation.
2. Install new "O" rings on vehicle speed sensor and speedometer adapter, shown in Figure 50.
3. Lubricate "O" rings with Trans-Jel.
4. Install vehicle speed sensor in adapter and torque screw to 15-27 in.lbs. (See Figure 50).
5. Count the number of teeth on the speedometer pinion, before installing into the housing.
6. Install the speedometer pinion in the speedometer adapter (See Figure 50).
7. Note index numbers on adapter body, as shown in Figure 51. These numbers will corespond to the number of teeth on the speedometer pinion.
8. Install speedometer assembly into the housing. Extension housing on 2WD model and transfer case on 4WD models.
9. Rotate adapter until required range of numbers are at 6 O-Clock position. Be sure range index numbers correspond to number of teeth on speedometer pinion. (See Figure 51).
10. Install speedometer adapter clamp and torque to 90-110 in.lbs.

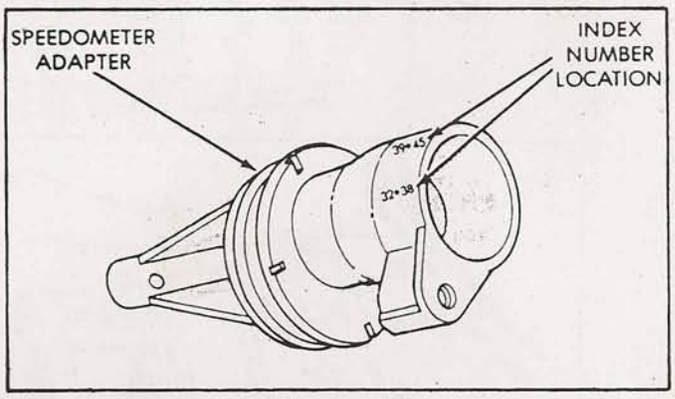

Figure 51

SPECIFICATIONS

42RE GENERAL SPECIFICATIONS

TRANSMISSION MODEL	42 RE
Oil Pump Clearances (all)	0.089-0.190 mm (0.0035-0.0075 in)
Planetary End Play	0.127-1.22 mm (0.005-0.048 in)
Input Shaft End Play	0.56-2.31 mm (0.022-0.091 in)
Clutch Pack Clearance: Front Clutch (4 Disc) Rear Clutch (4 Disc)	 1.70-3.40 mm (0.067-0.134 in) 0.81-1.40 mm (0.032-0.055 in)
Clutch Disc Usage: Front Clutch Rear Clutch Overdrive Clutch Direct Clutch	 4 4 3 6
Band Adjustments: (backed off form 72 in. lbs.) Front Band Rear Band	 3-5/8 Turns 4 Turns
Recommended (and preferred) Fluid	MOPAR ATF Plus, Type 7176 Automatic Transmission Fluid

42RE THRUST WASHER/SPACER/SNAP RING DIMENSIONS

TRANSMISSION MODEL	42 RE
Front Clutch Thrust Washer (on reaction shaft support hub)	0.061 in.
Rear Clutch Thrust Washer (on clutch retainer)	0.061 in.
Intermediate Shaft Thrust Plate (on shaft pilot hub)	0.060-0.063 in.
Intermediate Shaft Thrust Washer (in rear clutch hub)	Select fit to set overall end play
Rear Clutch Pack Snap Ring	0.060 in. 0.076 in. 0.098 in.
Planetary Geartrain Snap Ring (at front end of intermediate shaft)	Select fit (3 thicknesses available)
Overdrive Piston Thrust Plate	Thrust plate and spacer are select fit components. Refer to size charts and selection procedures in "Overdrive Unit Assembly and Adjustment."
Intermediate Shaft Spacer	

42RE TORQUE SPECIFICATIONS

DESCRIPTION	TORQUE
Cooler Line Fittings (at transmission)	18 N•m (13 ft. lbs.)
Converter Bolts:	
10.75 in., 4-lug converter	31 N•m (270 in. lbs.)
Crossmember Bolts/Nuts	68 N•m (50 ft. lbs.)
Driveplate Bolts	75 N•m (55 ft. lbs.)
Front Band Lever Pivot Shaft Access Plug	17 N•m (13 ft. lbs.)
Front Band Adjusting Screw Locknut	34 N•m (25 ft. lbs.)
Park/Neutral Position Switch	34 N•m (25 ft. lbs.)
Oil Filter Screws	4 N•m (35 in. lbs.)
Oil Pan Bolt	17 N•m (13 ft. lbs.)
Oil Pump Bolt	20 N•m (15 ft. lbs.)
Overrunning Clutch Cam Bolts	17 N•m (150 in. lbs.)

DESCRIPTION	TORQUE
Overdrive-to-Transmission Case Bolts	34 N•m (25 ft. lbs.)
Overdrive Piston Retainer Bolts	17 N•m (150 in. lbs.)
Pressure Test Port Plugs	14 N•m (10 ft. lbs.)
Propeller Shaft Clamp Bolts	19 N•m (170 in. lbs.)
Reaction Shaft Support Bolts	20 N•m (15 ft. lbs.)
Rear Band Adjusting Screw Locknut	41 N•m (30 ft. lbs.)
Solenoid Wiring Connector Screw	4 N•m (35 in. lbs.)
Solenoid-to-Transfer Plate Screw	4 N•m (35 in. lbs.)
Speedometer Adapter Bolt	11 N•m (8 ft. lbs.)
Valve Body/Governor Body Screws	4 N•m (35 in. lbs.)
Valve Body-to-Case Bolts	12 N•m (100 in. lbs.)
Transmission speed sensor	27 N•m (20 ft. lbs.)

HYDRAULIC FLOW IN REVERSE

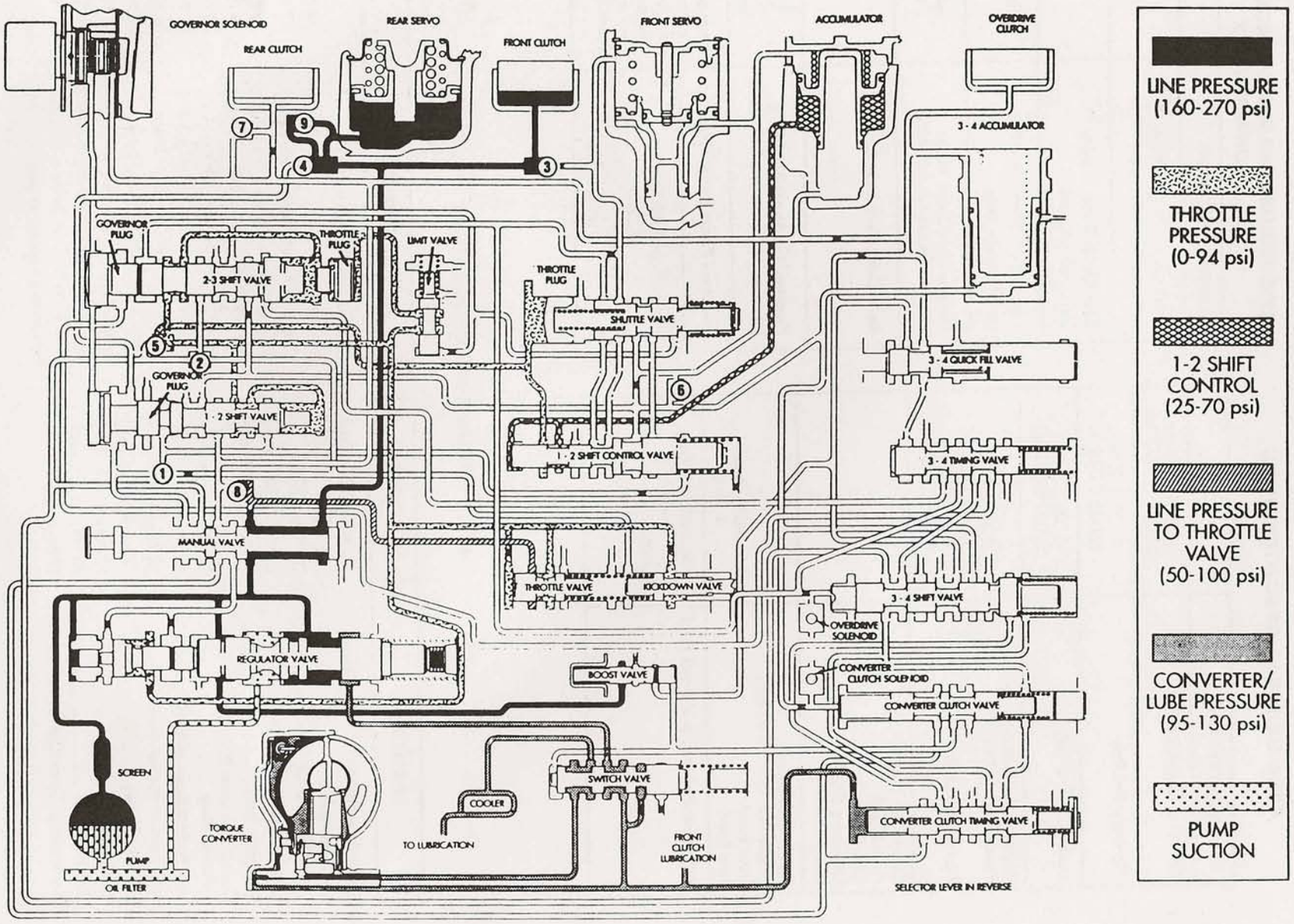

HYDRAULIC FLOW IN DRIVE FIRST GEAR

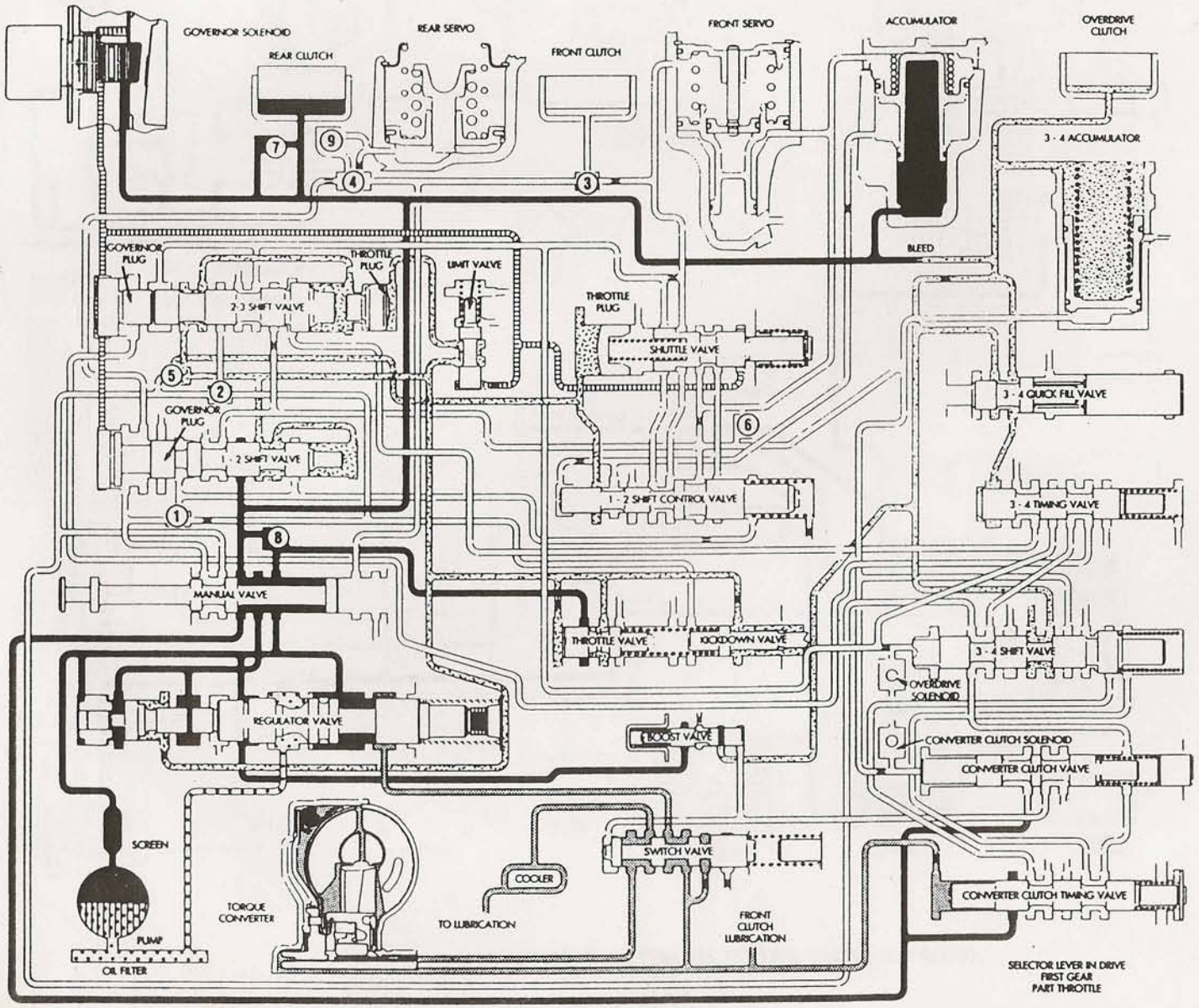

HYDRAULIC FLOW IN DRIVE FIRST GEAR

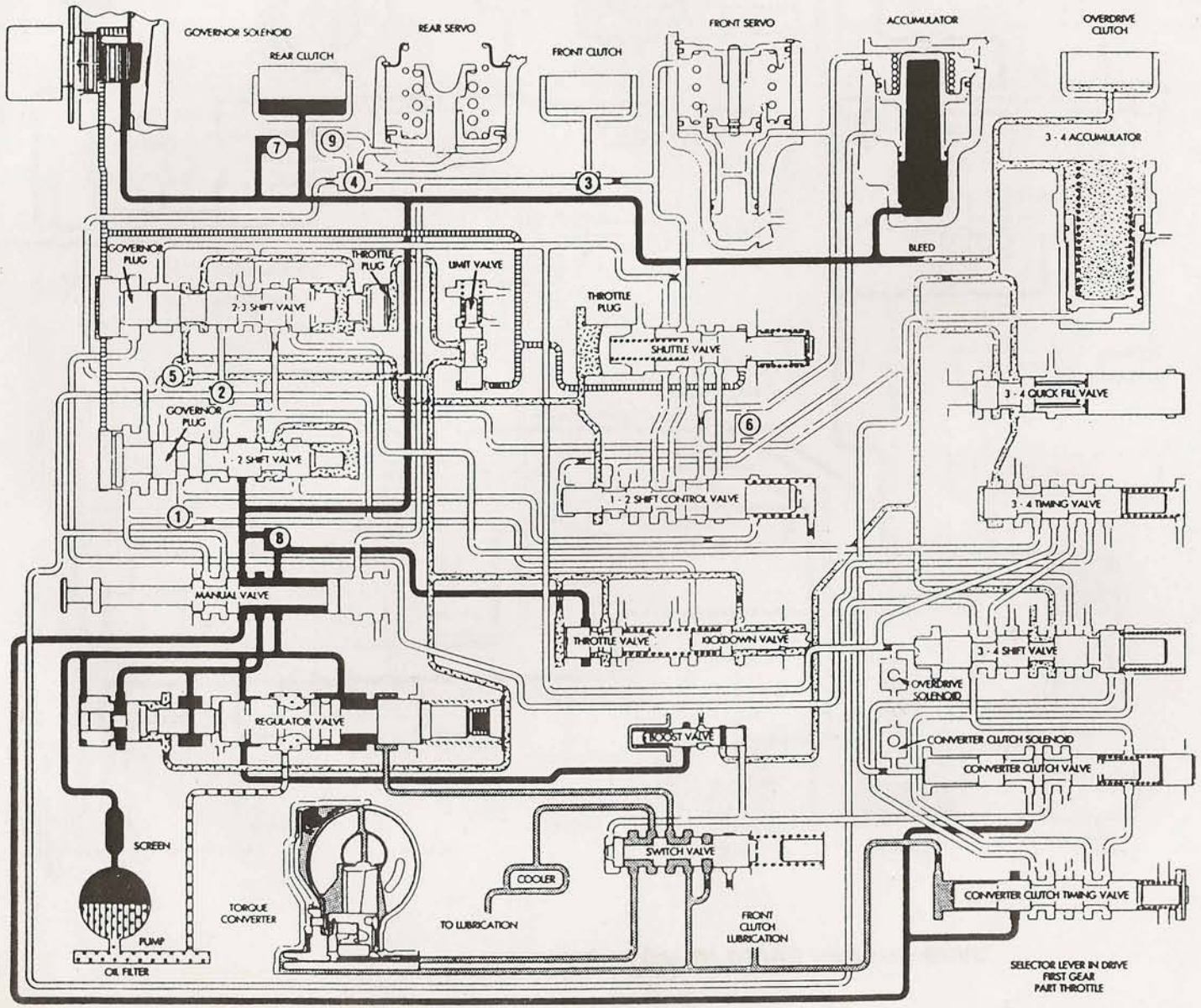

HYDRAULIC FLOW IN DRIVE SECOND GEAR

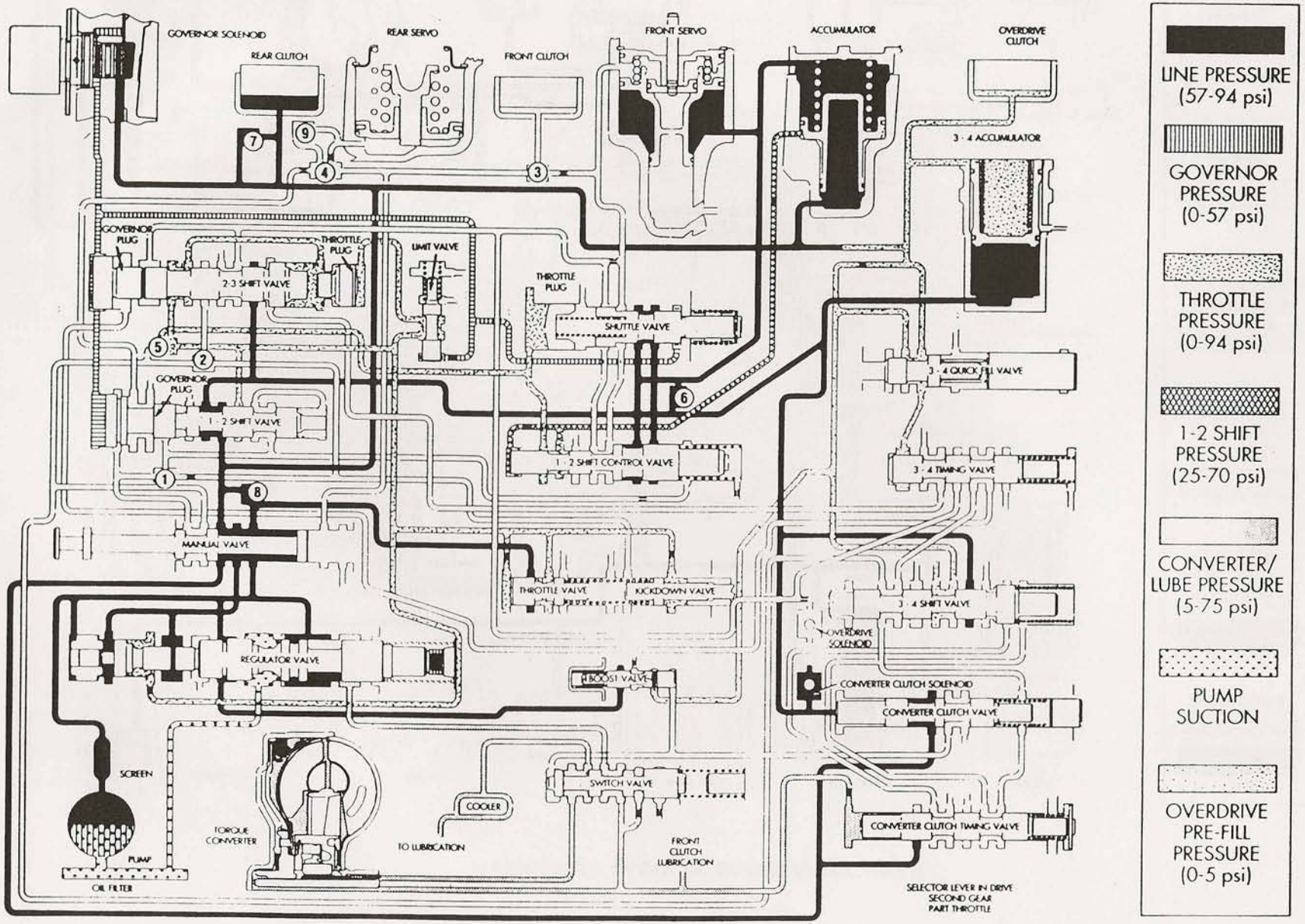

HYDRAULIC FLOW IN DRIVE THIRD GEAR

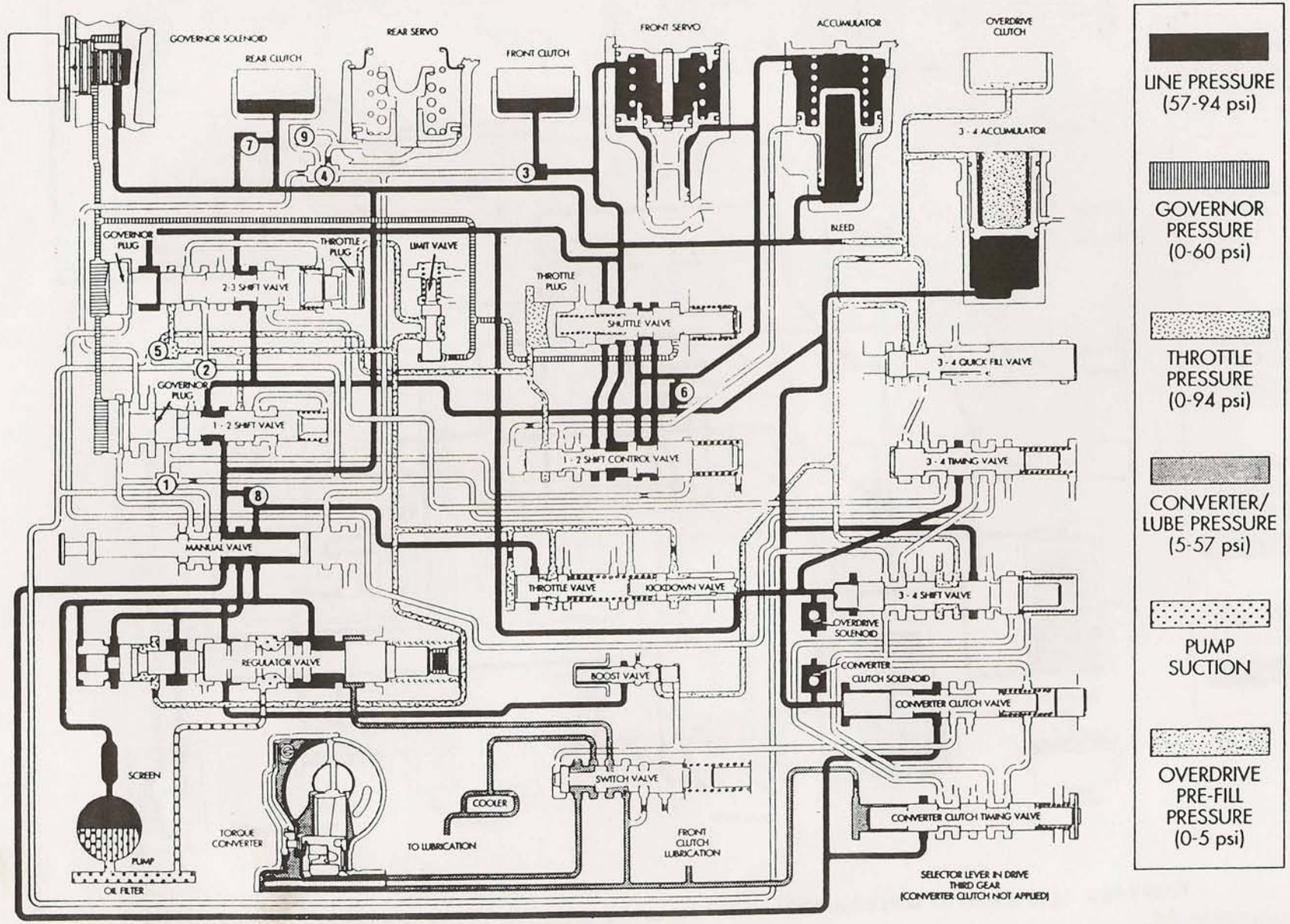

HYDRAULIC FLOW IN DRIVE FOURTH GEAR (CONVERTER CLUTCH NOT APPLIED)

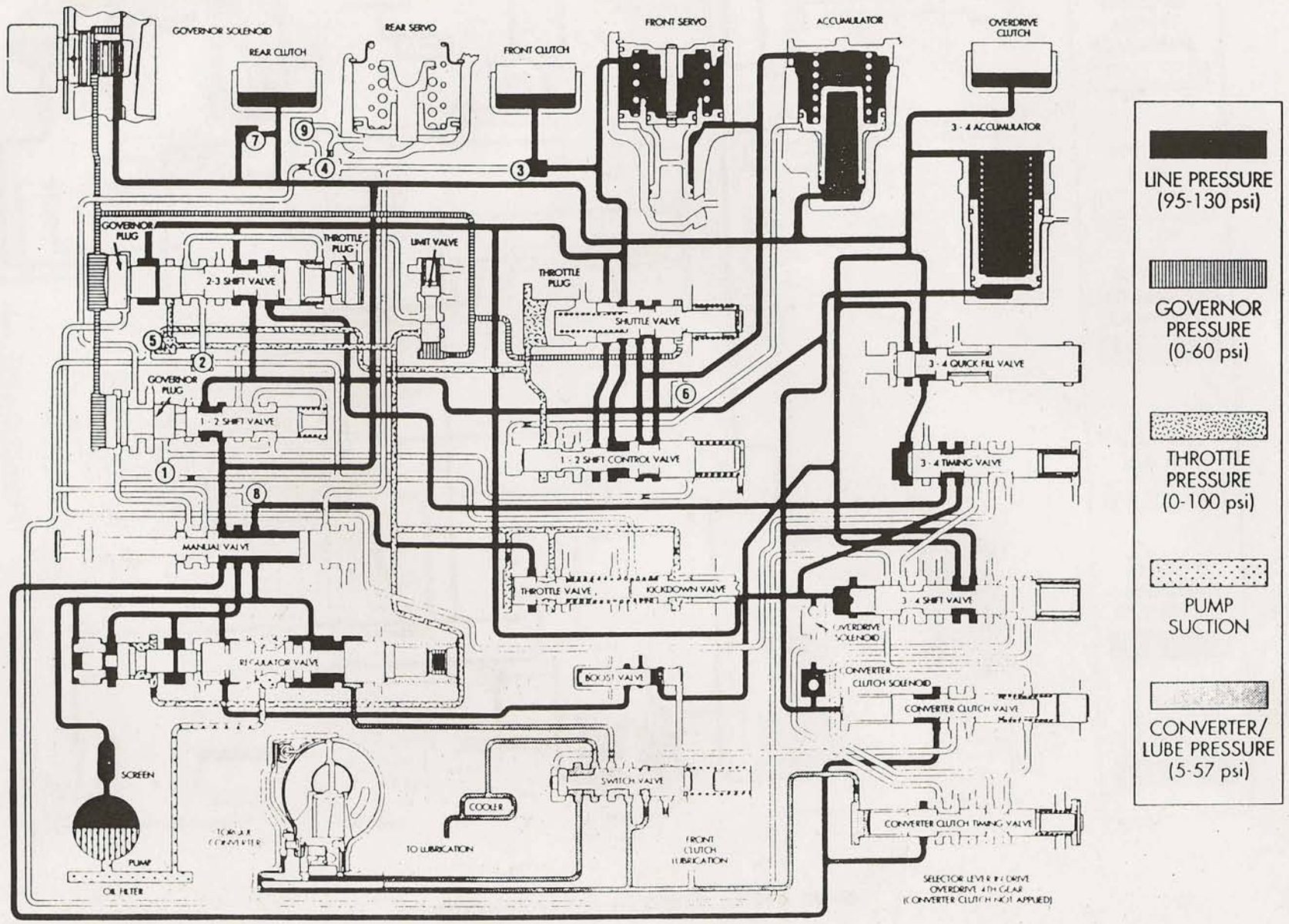
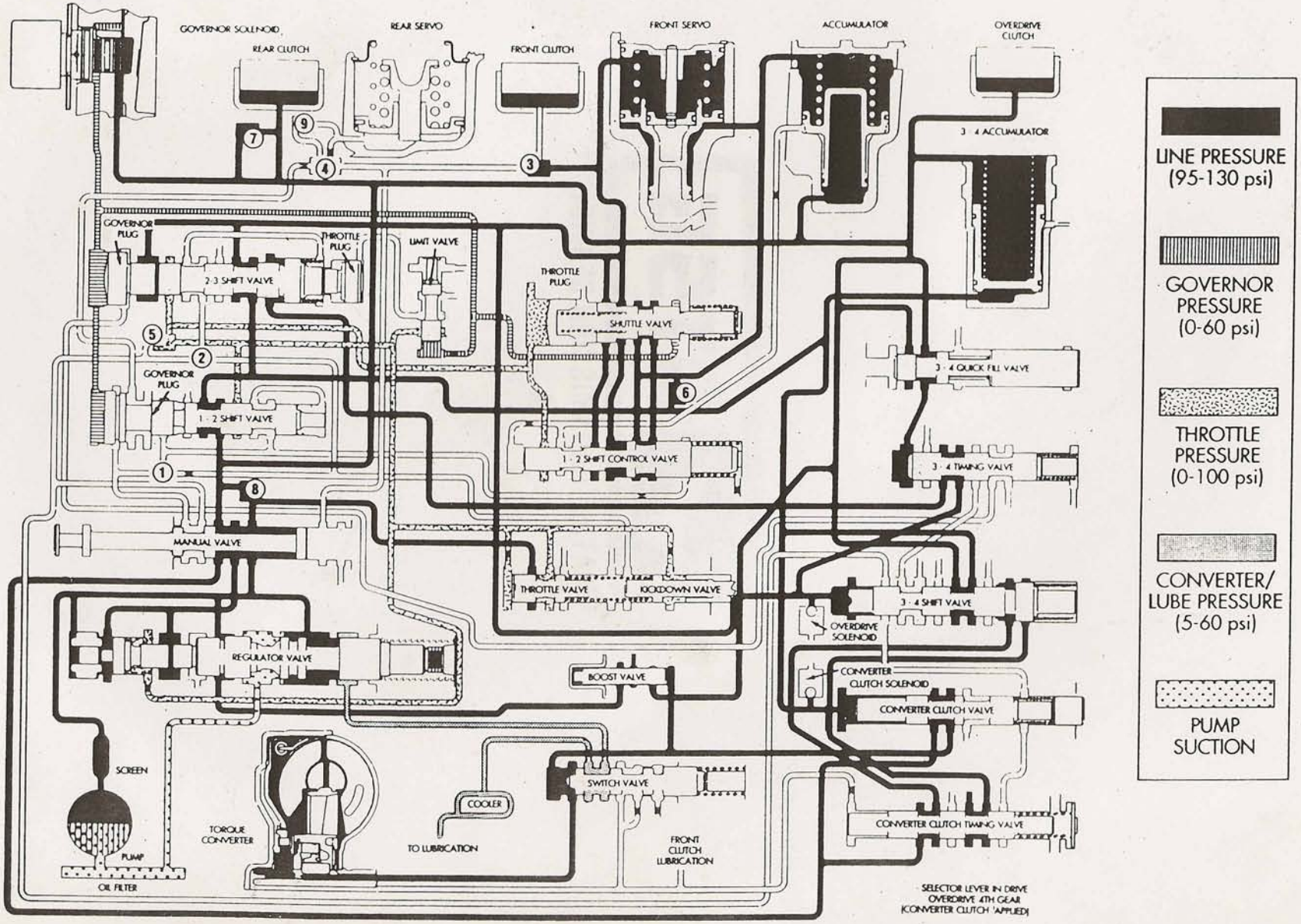
HYDRAULIC FLOW IN DRIVE FOURTH GEAR (CONVERTER CLUTCH APPLIED)